May.1.2024 Copyright 2024 HIROSE ELECTRIC CO., LTD. All Rights Reserved.
In case of consideration for using Automotive equipment / device which demand high reliability, kindly contact our sales window correspondents.

	COUNT	DESCRIPTION OF REVISIONS	BY	CHKD	DATE		COUNT	DESCRIPTION OF REVISIONS	BY	CHKD	DATE
△					. .	△					. .
△					. .	△					. .
△					. .	△					. .

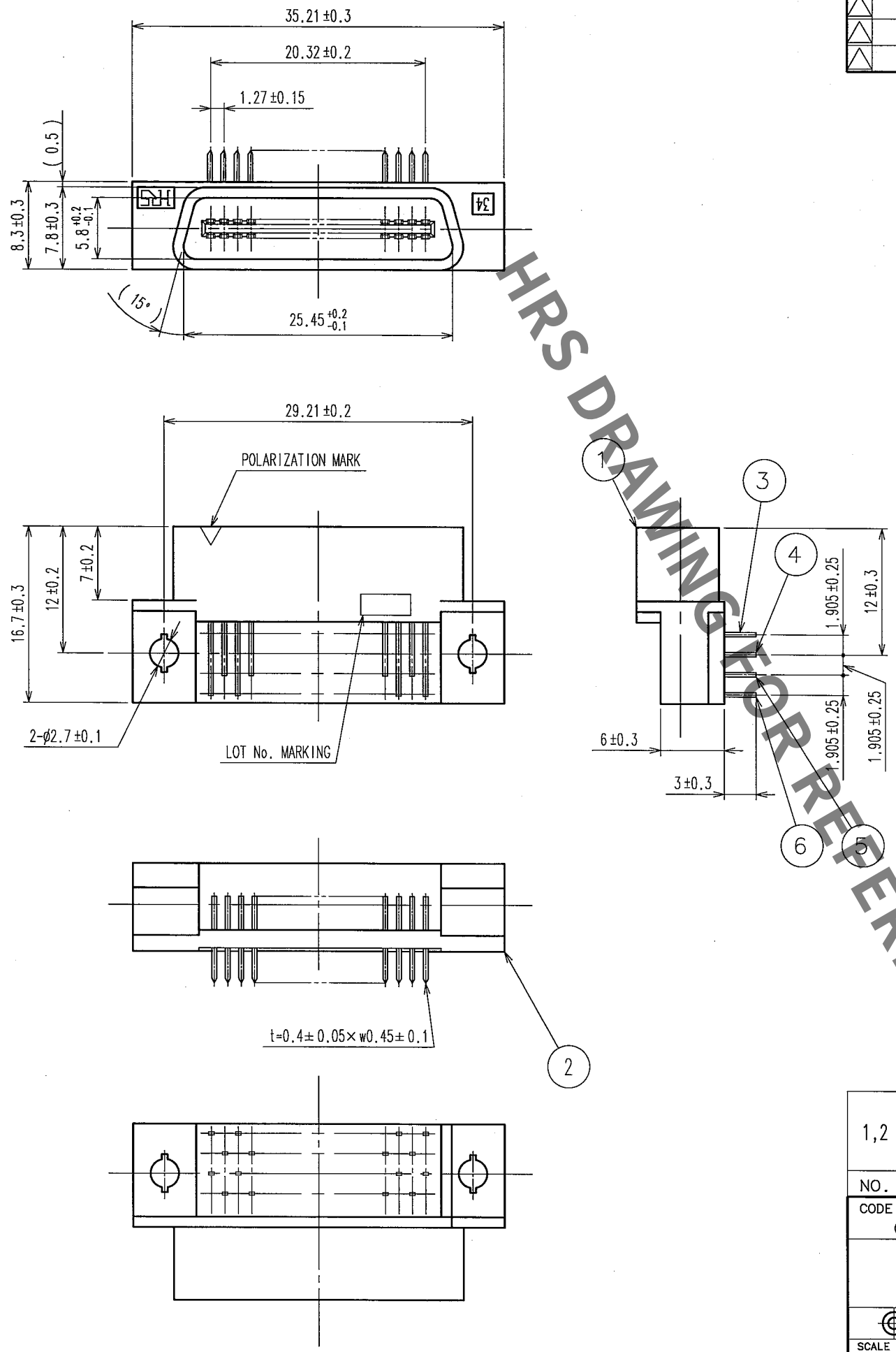

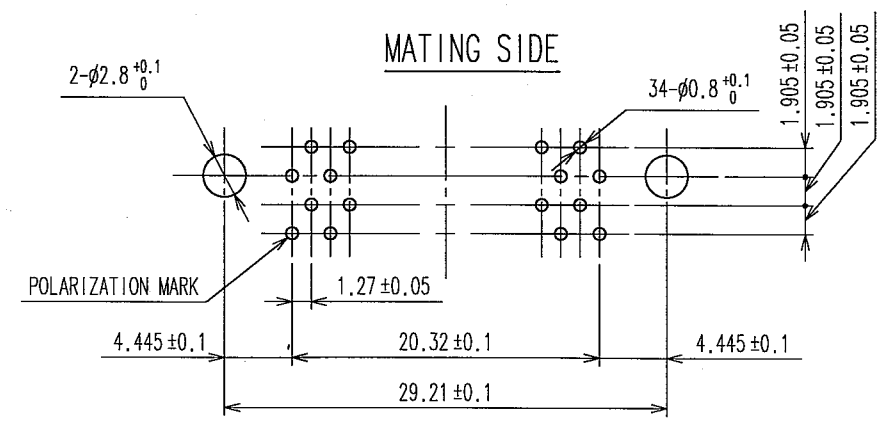

RECOMMENDED PC BOARD HOLE PATTERN (MOUNTING SIDE)

NOTE 1. THE DIMENSIONS IN PARENTHESES ARE FOR REFERENCE.

HRS DRAWING FOR REFERENCE

NO.	MATERIAL	FINISH, REMARKS	NO.	MATERIAL	FINISH, REMARKS
1,2	PBT	BLACK UL94V-0	3~6	BRASS	CONTACT AREA:GOLD 0.2μm min. DIP AREA:TIN-PLATING 2μm min. UNDER PLATING:NICKEL 1μm min.

CODE NO.(OLD)	DRAWN	DESIGNED	CHECKED	APPROVED	RELEASED
CL	T.YANAGISAWA '05.11.30	H.Nakamura '05.11.30	J.C.Ozawa '05.11.30	H.Okawa '05.11.30	. .

SCALE 2 : 1	DRAWING NO. EDC3-080183-21	PART NO. HIF7-34PA-1.27DS(71)
UNITS mm	HRS HIROSE ELECTRIC CO., LTD	CODE NO. CL670-0207-9-71 1/1

TO

FORM NO.229