Jun.1.2024 Copyright 2024 HIROSE ELECTRIC CO., LTD. All Rights Reserved.
In case of consideration for using Automotive equipment / device which demand high reliability, kindly contact our sales window correspondents.

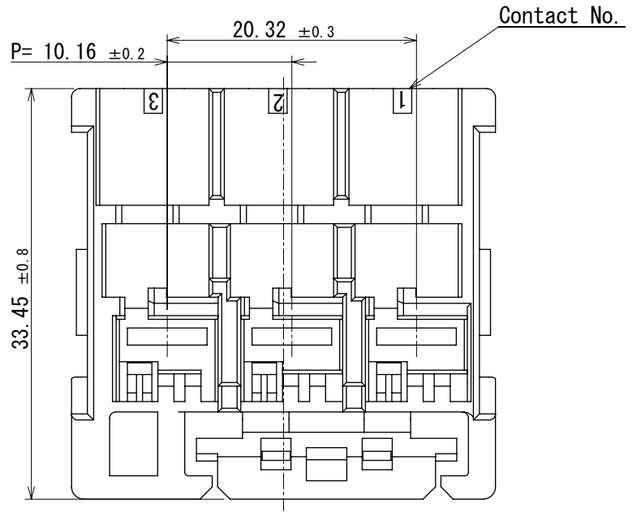

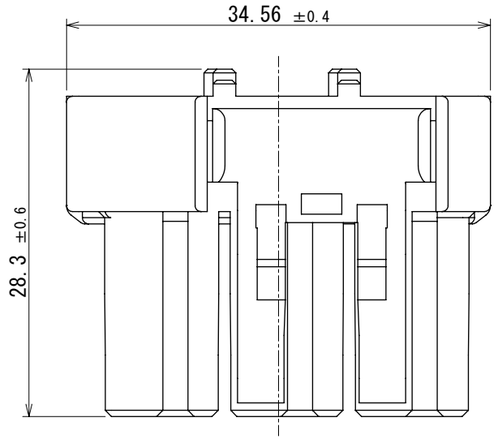

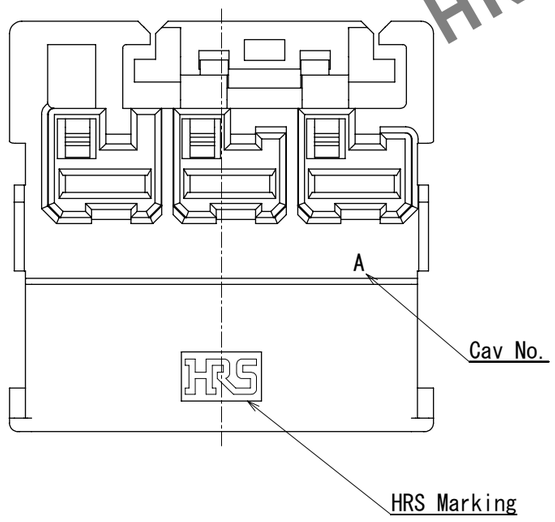

Mating state figure

Straight for PCB

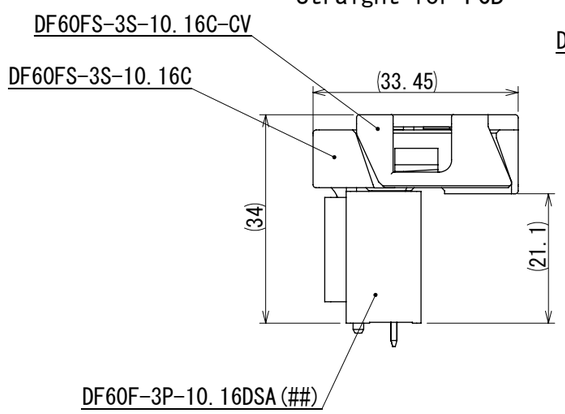

In-line

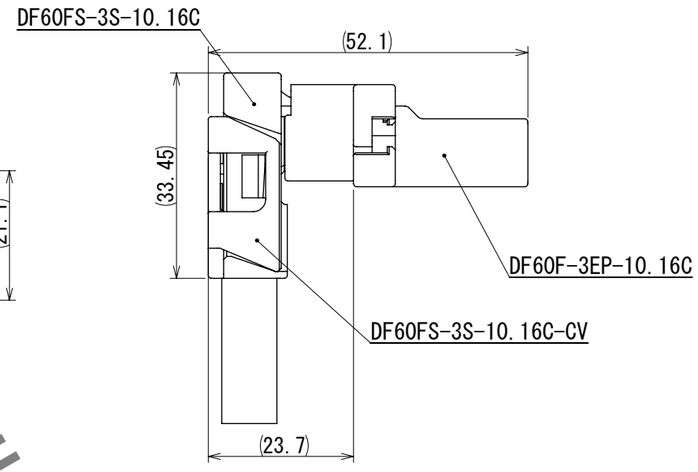

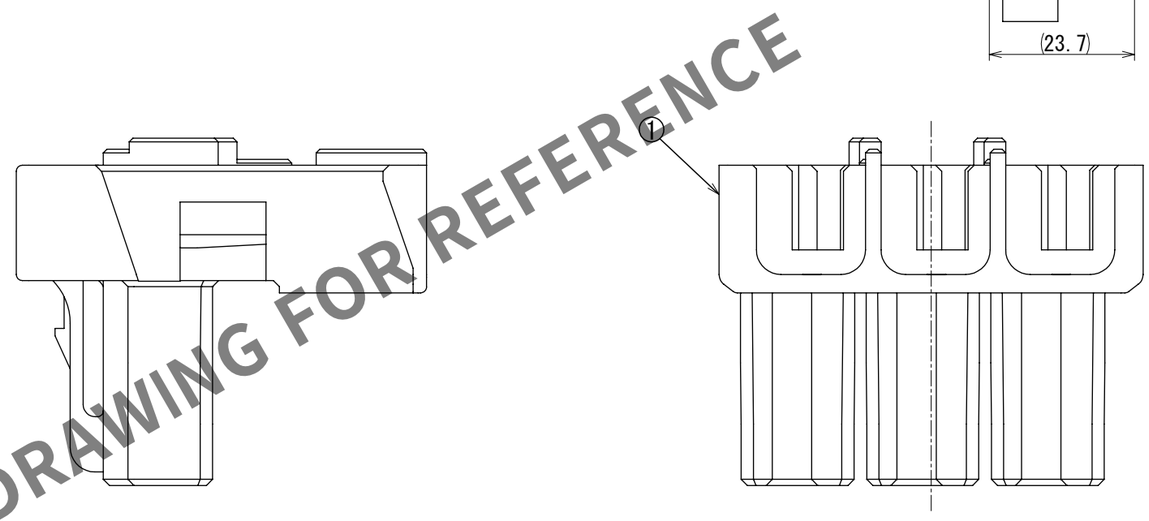

HRS DRAWING FOR REFERENCE

Note 1. 100 Pieces / Pack
2. Please refer to the technical specification (ETAP-H1020-00) for the packing type.
3. Please refer to the technical specification (ETAD-H0654-00, ETAD-H0653-00) for handling.
4. There may be minor scraches, however does not affect performance.

NO.	MATERIAL	FINISH , REMARKS
1	PBT	Black, UL94V-0

UNITS	SCALE	COUNT	DESCRIPTION OF REVISIONS	DESIGNED	CHECKED	DATE
mm	2:1	0				

HIROSE ELECTRIC CO.,LTD.

APPROVED	: SJ.OKAMURA	2023.10.19	DRAWING NO.	EDC-402681-00-00
CHECKED	: TT.OHSAKO	2023.10.19	PART NO.	DF60FS-3S-10.16C
DESIGNED	: KT.NUMATA	2023.10.18	CODE NO.	CL0680-4015-0-00
DRAWN	: SK.CHIBA	2023.10.18		0 1/1

FORM HC0011-5