Apr.1.2024 Copyright 2024 HIROSE ELECTRIC CO., LTD. All Rights Reserved.
In case of consideration for using Automotive equipment / device which demand high reliability, kindly contact our sales window correspondents.

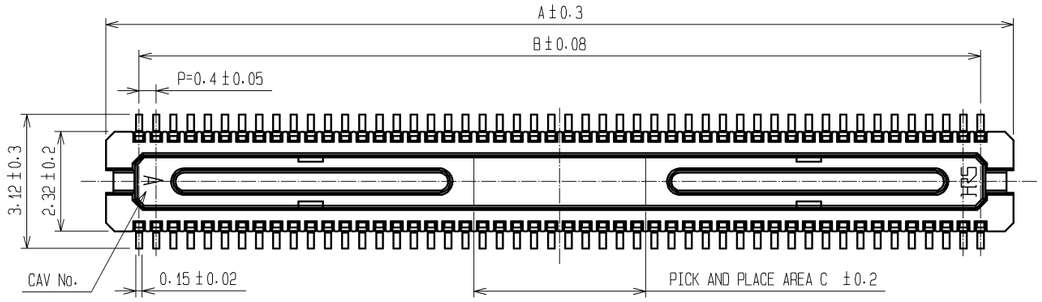

RECOMMENDED PATTERN

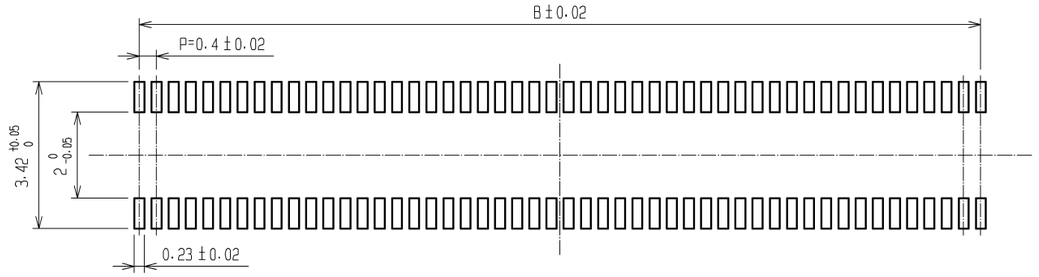

RECOMMENDED SOLDER PASTE:THICKNESS 120μm

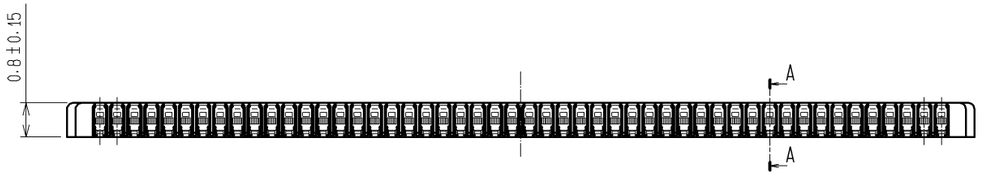

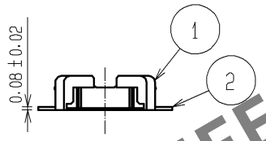

RECOMMENDED METAL MASK OPENING DIMENSIONS FOR LEAD PAD (20:1)

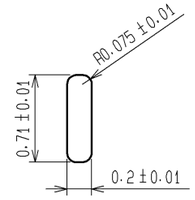

HRS DRAWING FOR REFERENCE

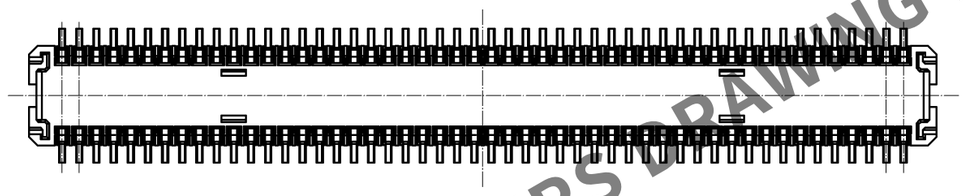

A-A(20:1)

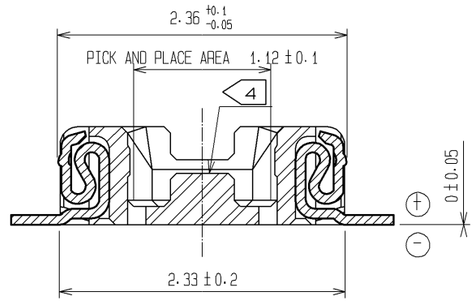

ENGAGEMENT FIGURE(20:1)

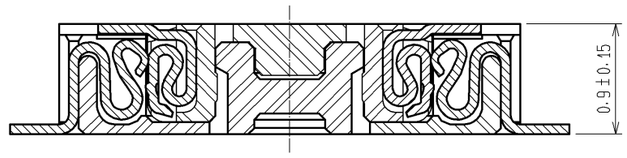

NOTE 1. ALL LEADS CO-PLANARITY SHALL BE 0.1 MAX.
2. PER REEL : 5000 CONNECTORS.
3. AT THE BEGINNING OF THE REEL, 100 MM AT MIN SHALL BE EMPTY POCKETS.
AT THE END OF THE REEL, 160 MM AT MIN SHALL BE EMPTY POCKETS.
4 NO CAVITY ON THE CONNECTORS LESS THAN 24 POS.
5 CONTACT PLATING SPECIFICATIONS.
CONTACT AREA : GOLD 0.05μm MIN.
SMT LEAD : GOLD 0.02μm MIN.
UNDERPLATING : NICKEL 1μm MIN.
(SURFACE : SEALING)

PART NO.	CODE NO.	A	B	C
DF30FC-80DP-0.4V(81)	CL684-1144-9-81	17.14	15.6	3.2
DF30FC-70DP-0.4V(81)	CL684-1077-3-81	15.14	13.6	2.8
DF30FC-60DP-0.4V(81)	CL684-1083-6-81	13.14	11.6	2.4
DF30FC-50DP-0.4V(81)	CL684-1143-6-81	11.14	9.6	2.0
DF30FC-44DP-0.4V(81)	CL684-1176-5-81	9.94	8.4	1.76
DF30FC-40DP-0.4V(81)	CL684-1079-9-81	9.14	7.6	1.6
DF30FC-34DP-0.4V(81)	CL684-1142-3-81	7.94	6.4	1.36
DF30FC-30DP-0.4V(81)	CL684-1141-0-81	7.14	5.6	1.2
DF30FC-24DP-0.4V(81)	CL684-1140-8-81	5.94	4.4	1.2
DF30FC-22DP-0.4V(81)	CL684-1139-9-81	5.54	4.0	1.2
DF30FC-20DP-0.4V(81)	CL684-1138-6-81	5.14	3.6	1.2

NO.	MATERIAL	FINISH , REMARKS	NO.	MATERIAL	FINISH , REMARKS
			5	PS	PLASTIC REEL(BLACK)
2	PHOSPHOR BRONZE	5	4	POLYESTER	CLEAR(COVER TAPE)
1	LCP	UL94V-0, BLACK	3	PS	CLEAR(EMBOSSED CARRIER TAPE)

UNITS	SCALE	COUNT	DESCRIPTION OF REVISIONS	DESIGNED	CHECKED	DATE
mm	FREE	2 4	DIS-H-005674	YN. SAKAMOTO	TS. MIYAZAKI	11.04.12

HRS HIROSE ELECTRIC CO., LTD.

APPROVED	: KJ. KATAYOSE	05.01.05	DRAWING NO.	EDC3-303555-02
CHECKED	: KI. AKIYAMA	05.01.05	PART NO.	DF30FC-*DP-0.4V(81)
DESIGNED	: TH. ARAI	05.01.05	CODE NO.	2 1/2
DRAWN	: TH. ARAI	05.01.05		

FORM HC0011-5-7

Apr.1.2024 Copyright 2024 HIROSE ELECTRIC CO., LTD. All Rights Reserved.
In case of consideration for using Automotive equipment / device which demand high reliability, kindly contact our sales window correspondents.

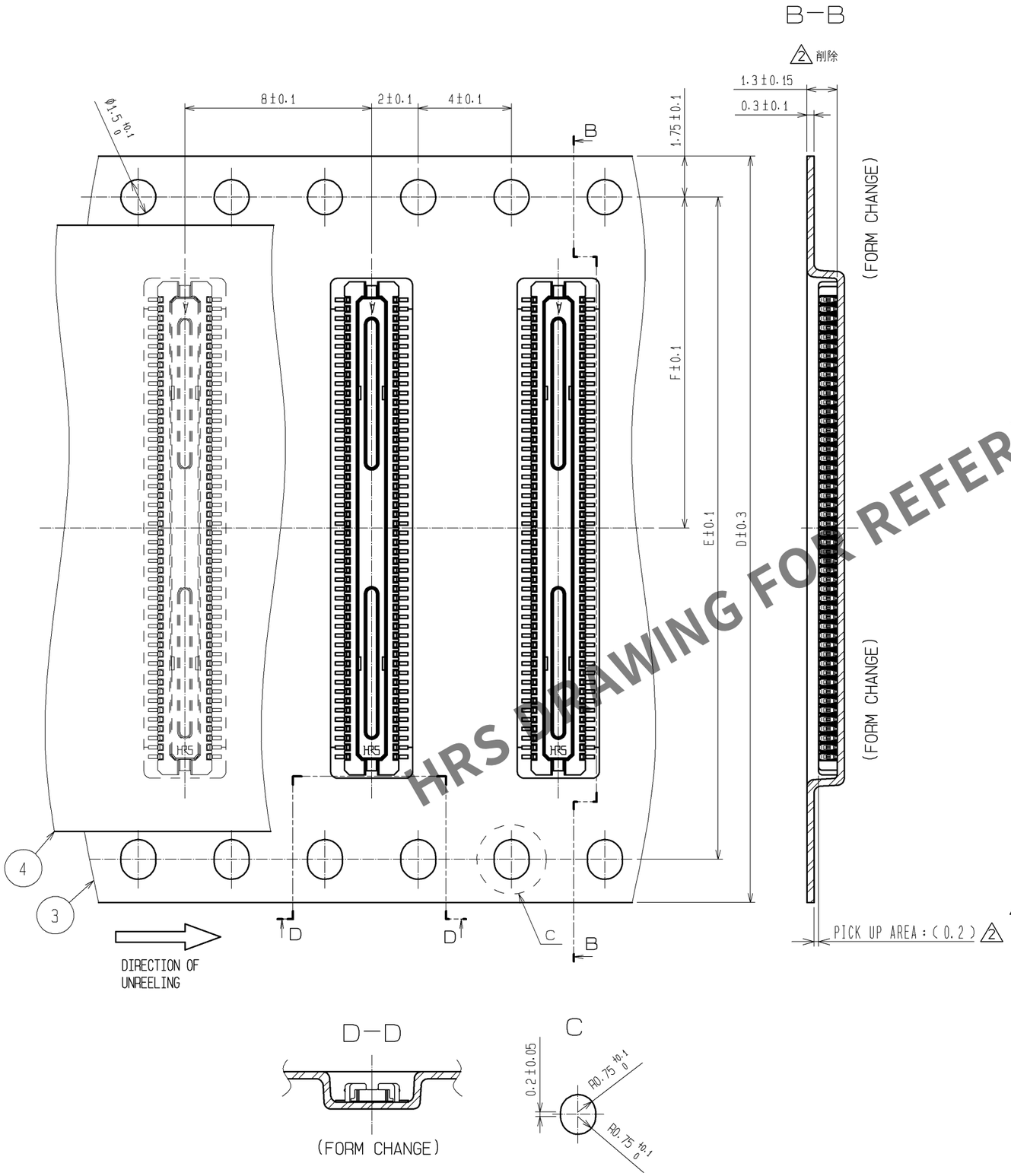

HRS DRAWING FOR REFERENCE

STYLE AND DIMENSION OF REEL (FREE SIZE)

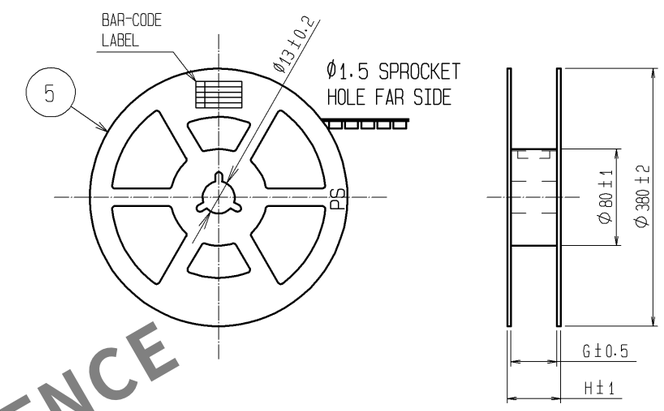

DETAIL OF PART NO. LABEL

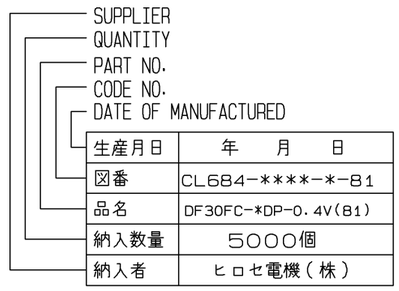

生産月日	年　月　日
図番	CL684−****−*−81
品名	DF30FC−*DP−0.4V(81)
納入数量	5000個
納入者	ヒロセ電機(株)

PART NO.	CODE NO.	D	E	F	G	H
DF30FC-80DP-0.4V(81)	CL684-1144-9-81	24	—	11.5	25.5	29.5
DF30FC-70DP-0.4V(81)	CL684-1077-3-81	24	—	11.5	25.5	29.5
DF30FC-60DP-0.4V(81)	CL684-1083-6-81	24	—	11.5	25.5	29.5
DF30FC-50DP-0.4V(81)	CL684-1143-6-81	24	—	11.5	25.5	29.5
DF30FC-44DP-0.4V(81)	CL684-1176-5-81	24	—	11.5	25.5	29.5
DF30FC-40DP-0.4V(81)	CL684-1079-9-81	16	—	7.5	17.5	21.5
DF30FC-34DP-0.4V(81)	CL684-1142-3-81	16	—	7.5	17.5	21.5
DF30FC-30DP-0.4V(81)	CL684-1141-0-81	16	—	7.5	17.5	21.5
DF30FC-24DP-0.4V(81)	CL684-1140-8-81	16	—	7.5	17.5	21.5
DF30FC-22DP-0.4V(81)	CL684-1139-9-81	16	—	7.5	17.5	21.5
DF30FC-20DP-0.4V(81)	CL684-1138-6-81	16	—	7.5	17.5	21.5

HRS	DRAWING NO. EDC3-303555-02
	PART NO. DF30FC-*DP-0.4V(81)
	CODE NO. 2 2/2