Apr.1.2024 Copyright 2024 HIROSE ELECTRIC CO., LTD. All Rights Reserved.
In case of consideration for using Automotive equipment / device which demand high reliability, kindly contact our sales window correspondents.

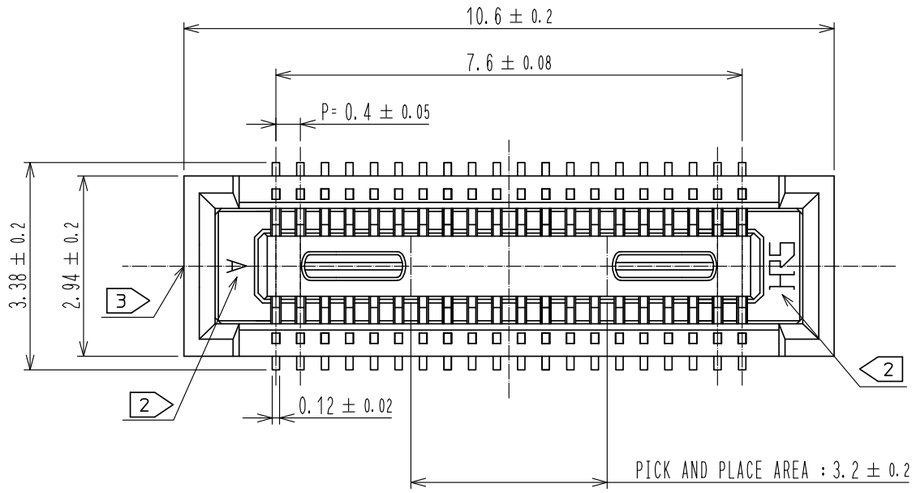

RECOMMENDED PATTERN

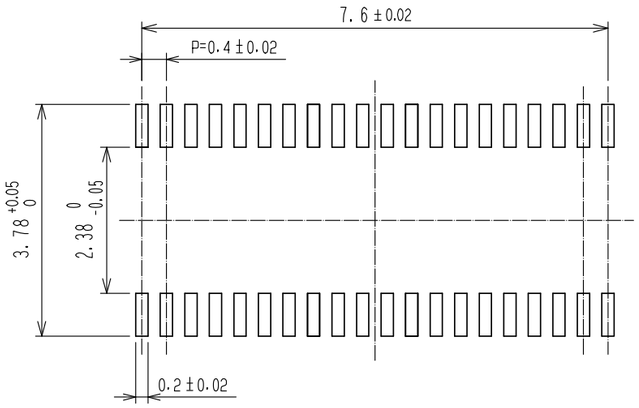

RECOMMENDED METAL MASK THICKNESS:120μm
RECOMMENDED MASK OPENING RATIO:80% FOR LEAD PAD

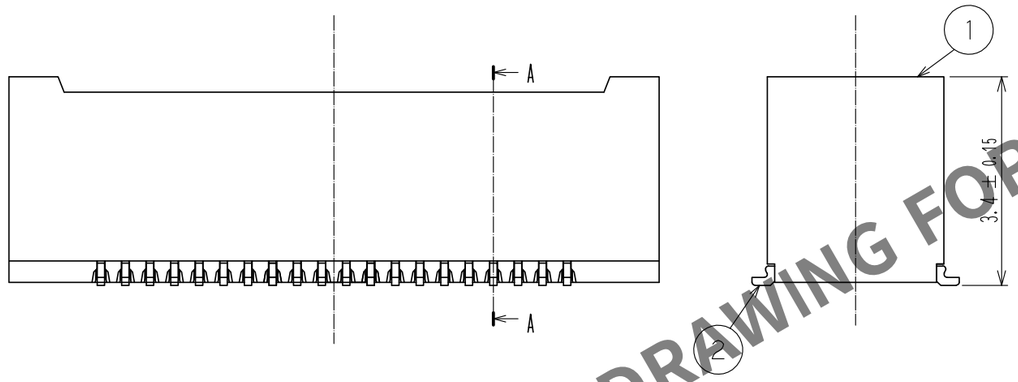

A-A(20:1)

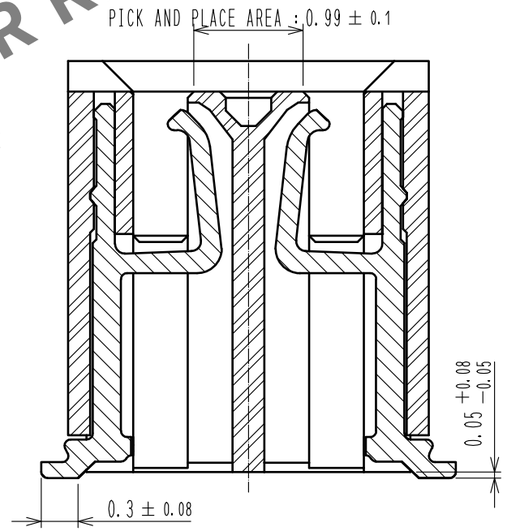

ENGAGEMENT FIGURE (20:1)

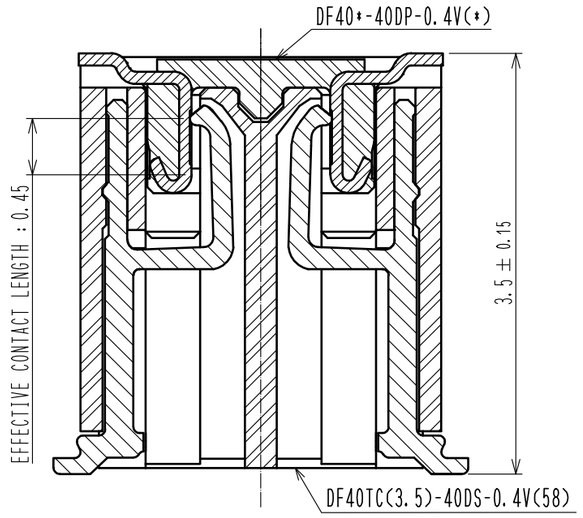

HRS DRAWING FOR REFERENCE

NOTES) 1. ALL LEADS CO-PLANARITY SHALL BE 0.1mm MAX.
2 HRS MARK AND CAV NO. ARE LOCATED IN APPROXIMAL AREA.
3 GATE IS COCATED IN APPROXIMAL AREA.

NO.	MATERIAL	FINISH , REMARKS	NO.	MATERIAL	FINISH , REMARKS
2	COPPER ALLOY	CONTACT AREA:GOLD 0.05μm MIN SMT LEAD:GOLD 0.05μm MIN UNDERPLATING:NICKEL 1μm MIN	6	PS	CLEAR, REINFORCEMENT COLLAR
			5	PS	BLACK, PLASTIC REEL
			4	POLYESTER	CLEAR, COVER TAPE
1	LCP	BLACK, UL94V-0	3	PS	CLEAR, EMBOSSED CARRIER TAPE

UNITS	SCALE	COUNT	DESCRIPTION OF REVISIONS	DESIGNED	CHECKED	DATE
mm	10 : 1	0				

HRS HIROSE ELECTRIC CO., LTD.

APPROVED	: WR. FUKUCHI	20210402	DRAWING NO.	EDC-385556-58-00
CHECED	: TS. MIYAZAKI	20210402	PART NO.	DF40TC(3.5)-40DS-0.4V(58)
DESIGNED	: YK. SATAKE	20210402	CODE NO.	CL0684-4254-0-58
DRAWN	: YK. SATAKE	20210402		0 1/2

FORM HC0011-5-7

Apr.1.2024 Copyright 2024 HIROSE ELECTRIC CO., LTD. All Rights Reserved.
In case of consideration for using Automotive equipment / device which demand high reliability, kindly contact our sales window correspondents.

EMBOSSED CARRIER TAPE PACKAGING (5:1)

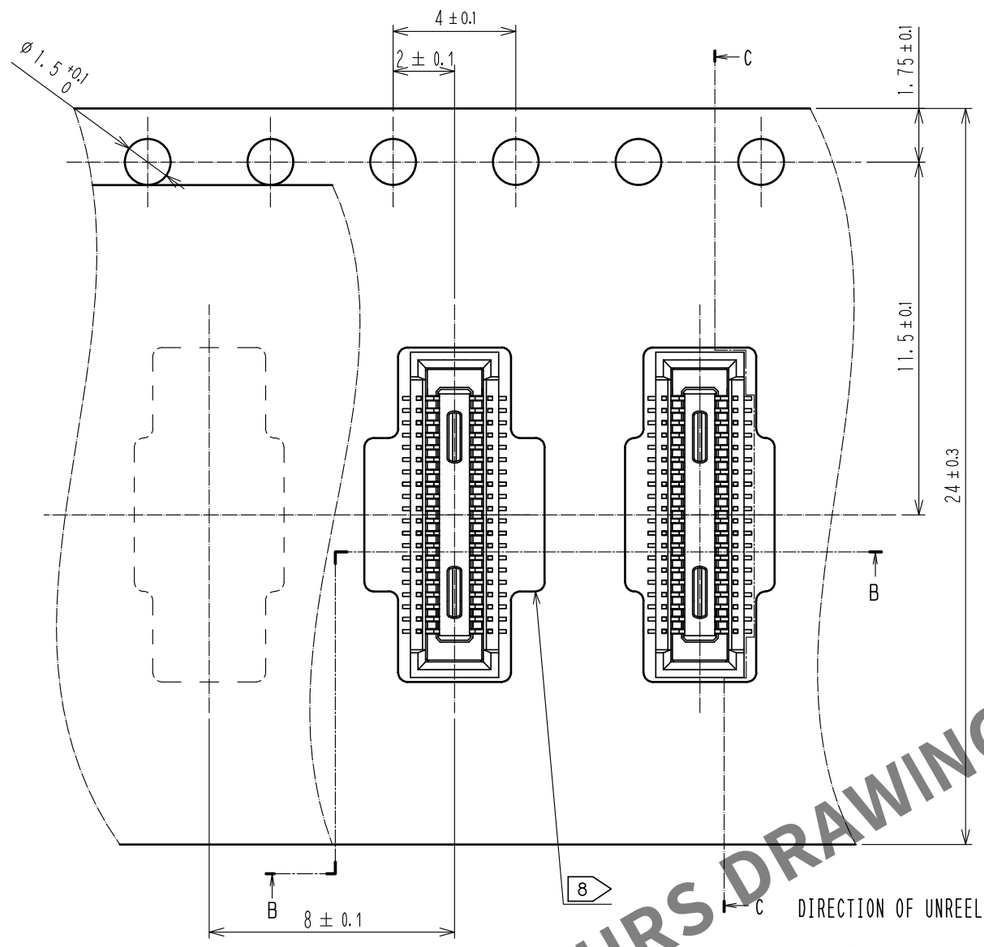

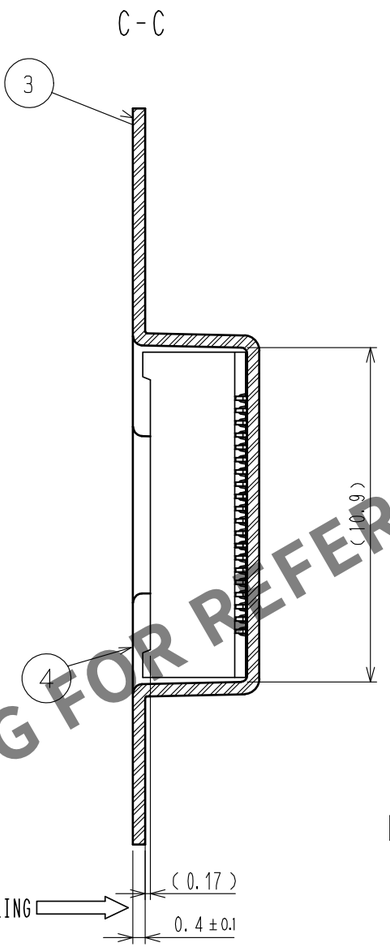

STYLE AND DIMENSION OF REEL(FREE)

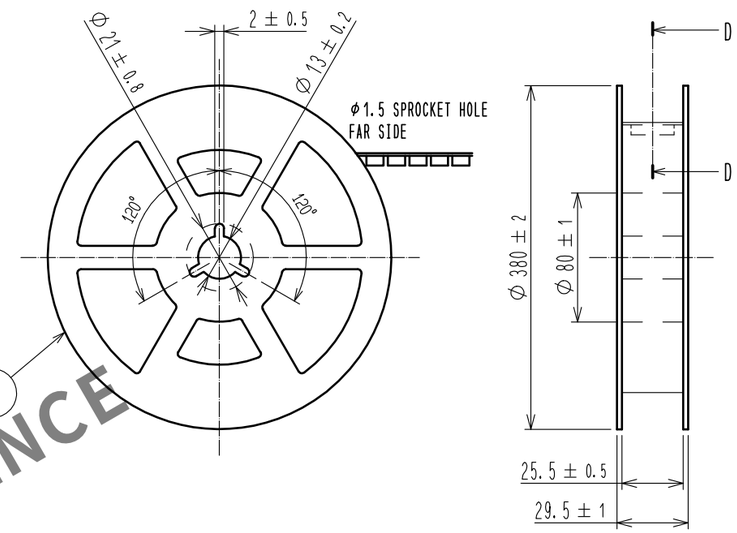

D-D(FREE)

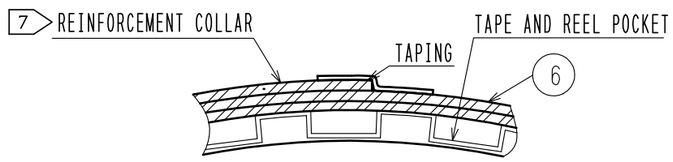

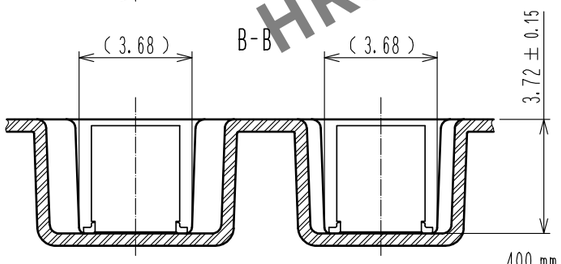

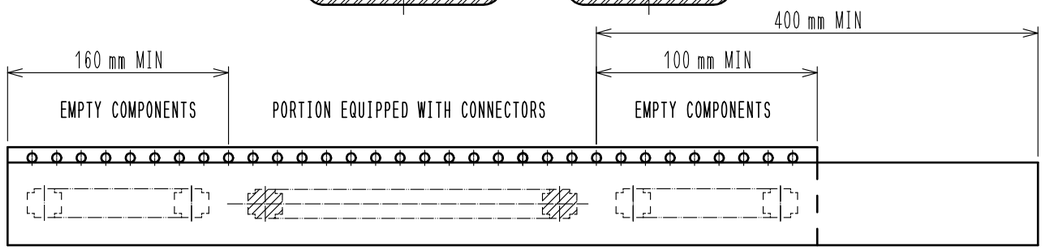

NOTES 4. PER REEL 1000 CONNECTORS.
5. THE DIMENSIONS IN PARENTHESES ARE FOR REFERENCE.
6 REFER TO JIS C 0806, IEC 60286-3
(PACKING OF COMPONENTS FOR AUTOMATIC HANDLING)
7 AFTER PACKAGING, ROLL 2 METERS OF THE REINFORCEMENT COLLAR
TO OUTER CIRCUMFERENCE OF TAPE AND REEL POCKET.
AND TAPE DOWN AT THE END THE COLLAR.
8 ONE OF SEVERAL IS DIFFERENT IN FROM OF THE EMBOSSED CAEEIER TAPE
TO AVOID BEING STUCK IN.

HRS DRAWING FOR REFERENCE

DRAWING NO.	EDC-385556-58-00
PART NO.	DF40TC(3.5)-40DS-0.4V(58)
CODE NO.	CL0684-4254-0-58

0 2/2