Apr.1.2024 Copyright 2024 HIROSE ELECTRIC CO., LTD. All Rights Reserved.
In case of consideration for using Automotive equipment / device which demand high reliability, kindly contact our sales window correspondents.

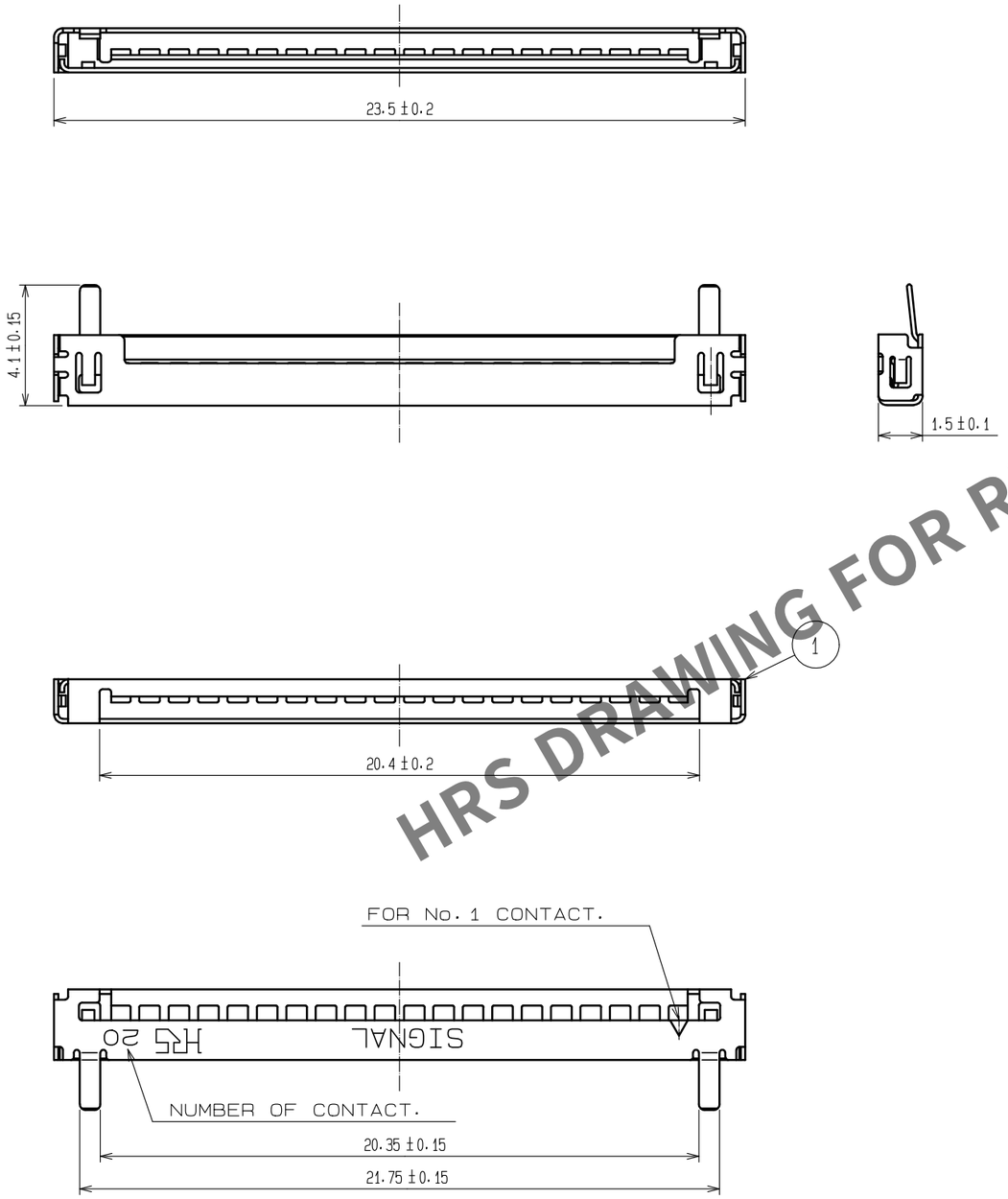

HRS DRAWING FOR REFERENCE

NOTE 1: TRAY PACKAGING.(100 PCS)

NO.	MATERIAL	FINISH , REMARKS	NO.	MATERIAL	FINISH , REMARKS
			1	STAINLESS STEEL	SURFACE: TIN PLATED 1μm min UNDER PLATED: NICKEL PLATED 1μm min

UNITS	SCALE	COUNT	DESCRIPTION OF REVISIONS	DESIGNED	CHECKED	DATE
mm	5 : 1	0				

HIROSE ELECTRIC CO., LTD.

APPROVED	: HS. OKAWA	20200313	DRAWING NO.	EDC-162455-06-00
CHECKED	: TS. KUMAZAWA	20200313	PART NO.	DF19G-20S-1F-GND(06)
DESIGNED	: HK. HAYASHI	20200313	CODE NO.	CL685-0010-3-06
DRAWN	: DS. HIROWATARI	20200306		0 1/1

FORM HC0011-5-7