May.1.2024 Copyright 2024 HIROSE ELECTRIC CO., LTD. All Rights Reserved.
In case of consideration for using Automotive equipment / device which demand high reliability, kindly contact our sales window correspondents.

ELV, RoHS COMPLIANT

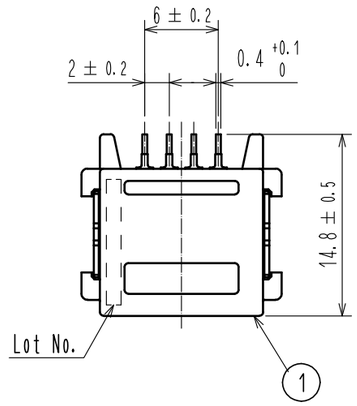

RECOMMENDED PCB PATTERN

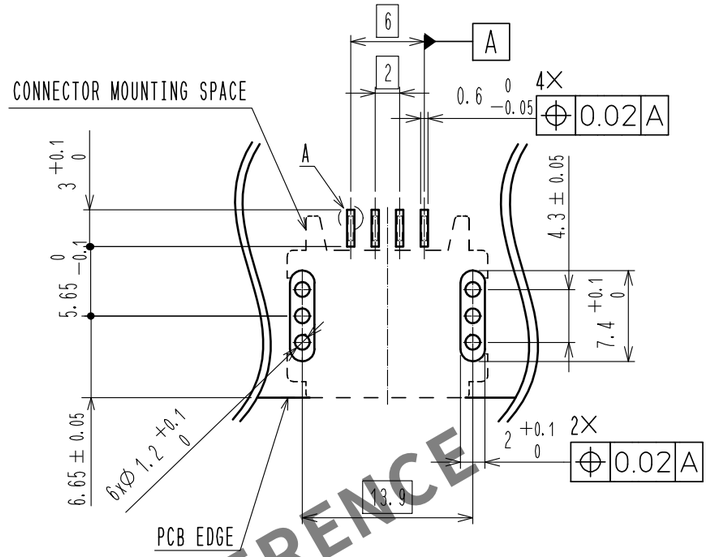

A(20:1)

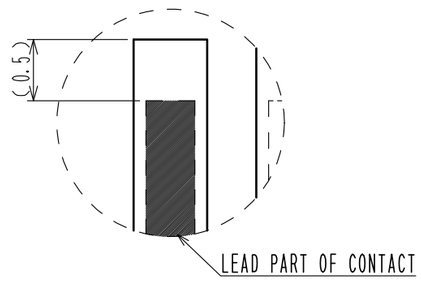

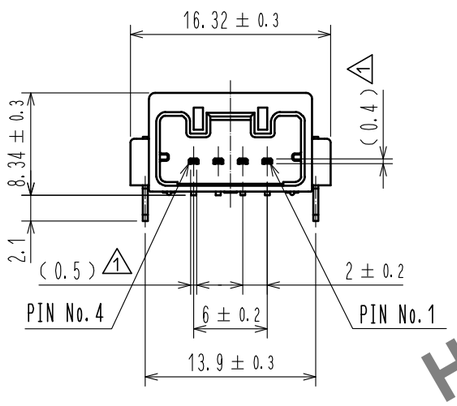

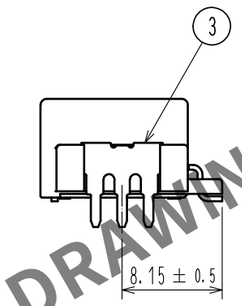

HRS DRAWING FOR REFERENCE

NOTE 1. RECOMMENDED TEMPERATURE PROFILE FOR REFLOW
(REFER TO RIGHT FIG.)
USED REFLOW SYSTEM : IR IN THE AIR OR NITROGEN
NO. OF CYCLES : 2 MAX
PEAK : 250℃
OVER 230℃ : 20~40s
PREHEAET : 150~180℃
90~120s 1
2. TEMPERATURE FOR SOLDERING IRON
:280~300℃ WITHIN 2s
3. CO-PLANARITY SHALL BE 0.1mm MAX.
4. RECOMMENDED PCB THICKNESS IS 1.6mm.
5. RECOMMENDED SOLDER THICKNESS IS 0.15mm.

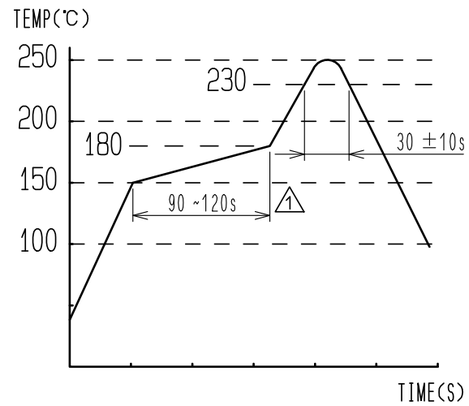

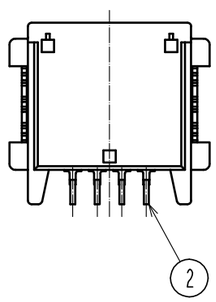

MATED CONNECTORS

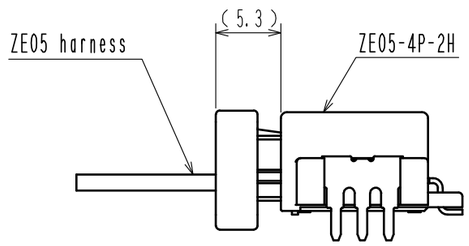

NO.	MATERIAL	FINISH , REMARKS
2	BRASS	SURFACE PLATING : TIN PLATING 1μm min UNDER PLATING : NICKEL 1μm min
1	PA	BLACK UL94V-0

NO.	MATERIAL	FINISH , REMARKS
5	POLYESTER	
4	POLYSTYRENE	
3	BRASS	SURFACE PLATING : TIN PLATING 1μm min UNDER PLATING : NICKEL 1μm min

UNITS	SCALE		COUNT	DESCRIPTION OF REVISIONS	DESIGNED	CHECKED	DATE
mm	2 : 1	1	4	DIS-T-00003979	YONGMUN LEE	HH. TSUKUMO	20181119

HIROSE ELECTRIC CO., LTD.

APPROVED	: HK. UMEHARA	20180523	DRAWING NO.	EDC-368627-00-00
CHECKED	: HK. UMEHARA	20180523	PART NO.	ZE05-4P-2H
DESIGNED	: AH. EDASHIGE	20180523	CODE NO.	CL752-2101-0-00
DRAWN	: MN. SATOH	20180523		1 / 2

FORM HC0011-5-7

May.1.2024 Copyright 2024 HIROSE ELECTRIC CO., LTD. All Rights Reserved.
In case of consideration for using Automotive equipment / device which demand high reliability, kindly contact our sales window correspondents.

PACKING STYLE

PACKING STYLE DRAWING

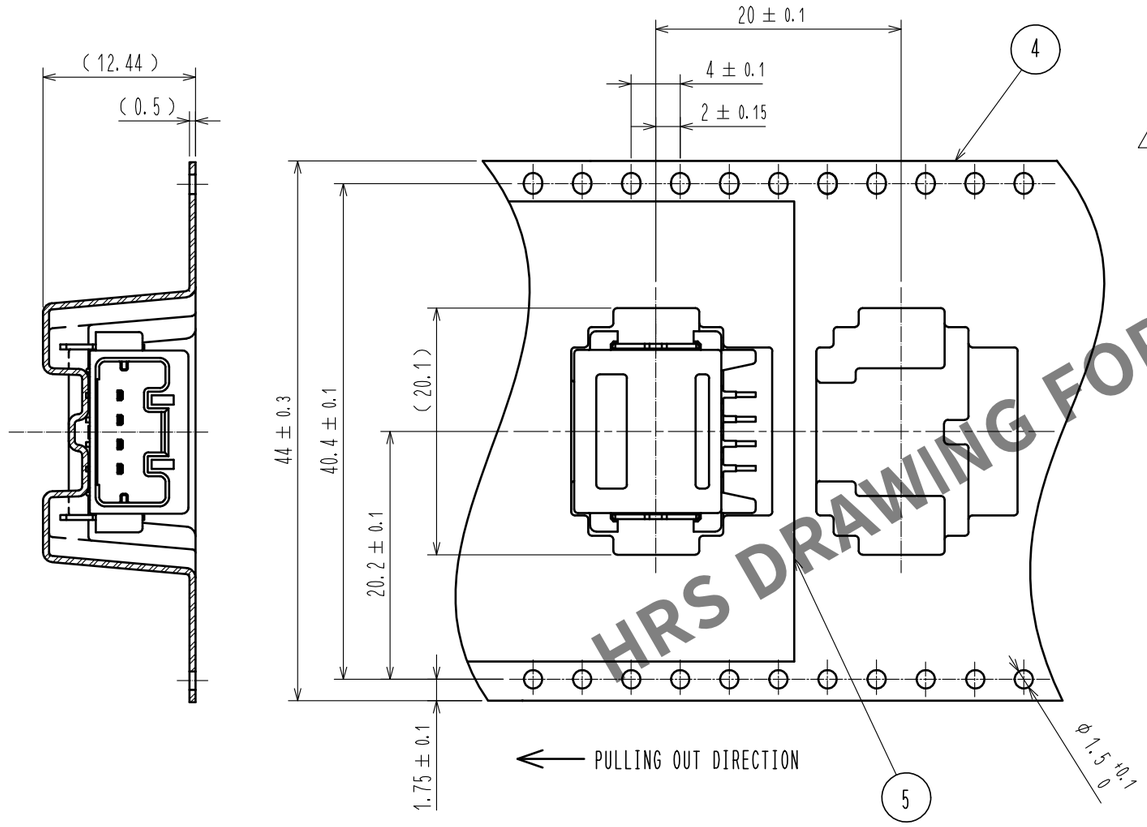

REEL DIMENSION (FREE)

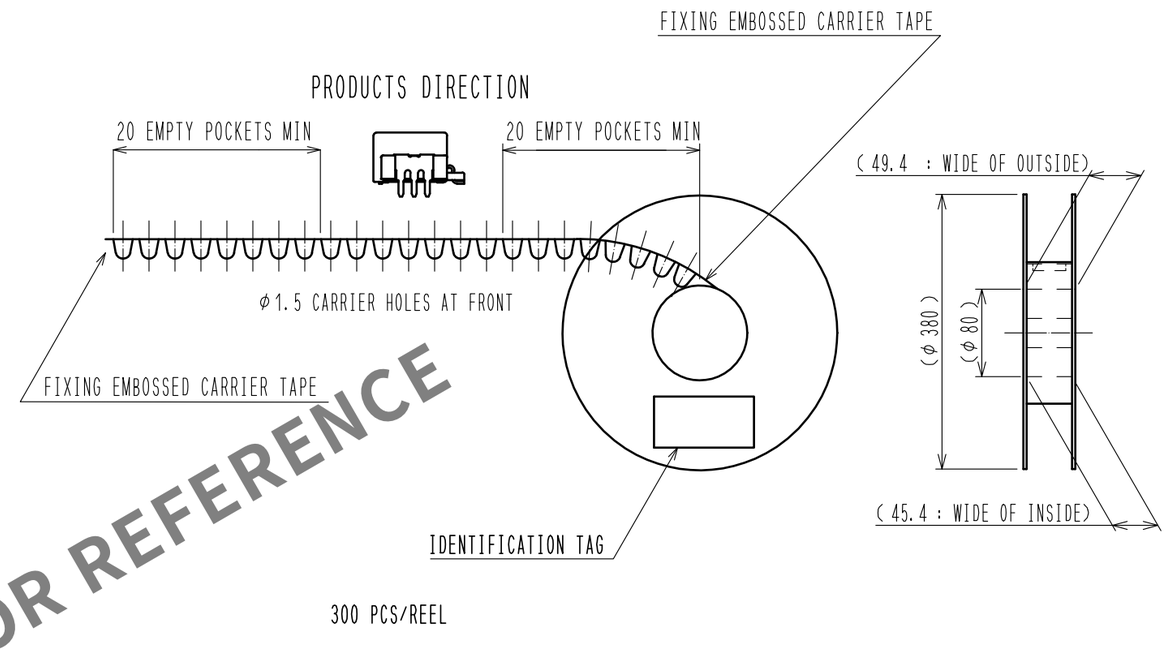

CARDBOARD DIMENSION (FREE)

W=(405) (mm)
D=(405) (mm)
H= (51) (mm)

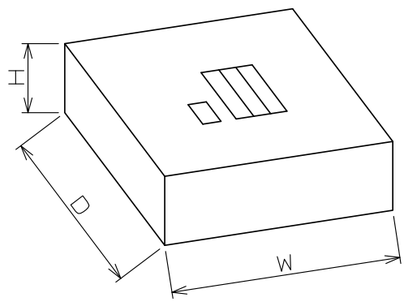

HRS DRAWING FOR REFERENCE

ASSEMBLY DRAWING	HRS	DRAWING NO.	EDC-368627-00-00
		PART NO.	ZE05-4P-2H
		CODE NO.	CL752-2101-0-00 △1 2/2

FORM HC0011-4-4