Apr.1.2024 Copyright 2024 HIROSE ELECTRIC CO., LTD. All Rights Reserved.
In case of consideration for using Automotive equipment / device which demand high reliability, kindly contact our sales window correspondents.

ELV, RoHS COMPLIANT

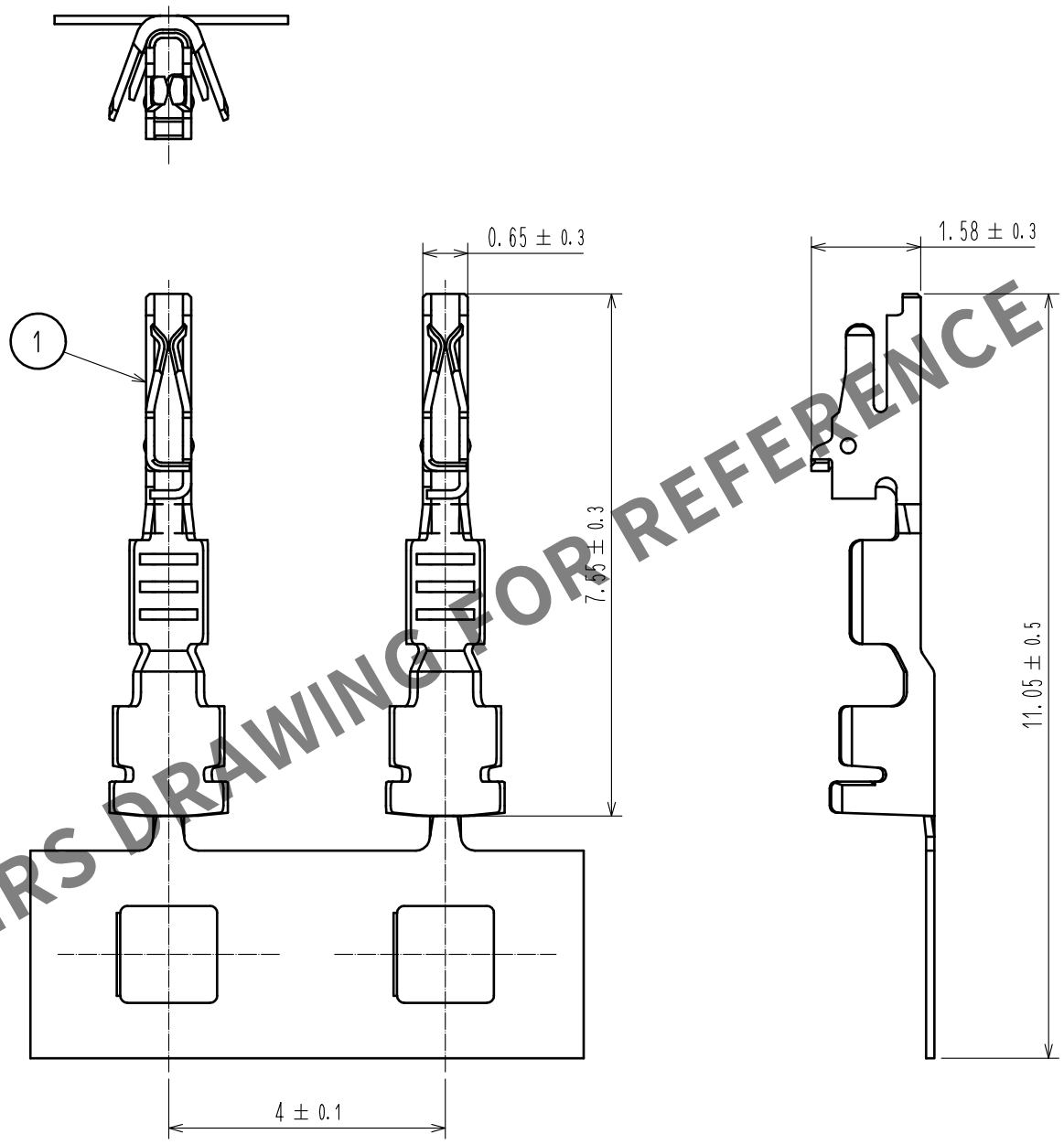


HRS DRAWING FOR REFERENCE

NOTE 1. 1 REEL : 28,000PCS
△2 2. REGARDING HOW TO HANDLE THE PACKAGED PRODUCTS, PLEASE REFER TO THE ATAD-T0946-00「INSTRUCTION MANUAL FOR HANDLING OF REEL PACKAGING CONTAINING CRIMP TERMINALS」

| NO. | MATERIAL | FINISH . REMARKS | NO. | MATERIAL | FINISH . REMARKS |
|---|---|---|---|---|---|
| 1 | COPPER ALLOYS | CONTACT : Au PLATING<br>OTHER : Ni PLATING | | | |

| UNITS | SCALE | | COUNT | DESCRIPTION OF REVISIONS | DESIGNED | CHECKED | DATE |
|---|---|---|---|---|---|---|---|
| mm | 5 : 1 | △2 | 1 | DIS-T-00013628 | AN. SAIKI | HH. TSUKUMO | 20220524 |

HIROSE ELECTRIC CO., LTD.

| | | |
|---|---|---|
| APPROVED | HK. UMEHARA | 20200806 |
| CHECKED | OM. MIYAMOTO | 20200805 |
| DESIGNED | YT. TAKANASHI | 20200805 |
| DRAWN | GY. YOON | 20200805 |

| | |
|---|---|
| DRAWING NO. | EDC-392584-00-00 |
| PART NO. | GT50-28SCFA |
| CODE NO. | CL0760-1001-0-00 △2 1/1 |

FORM HC0011-5-51