May.1.2024 Copyright 2024 HIROSE ELECTRIC CO., LTD. All Rights Reserved.
In case of consideration for using Automotive equipment / device which demand high reliability, kindly contact our sales window correspondents.

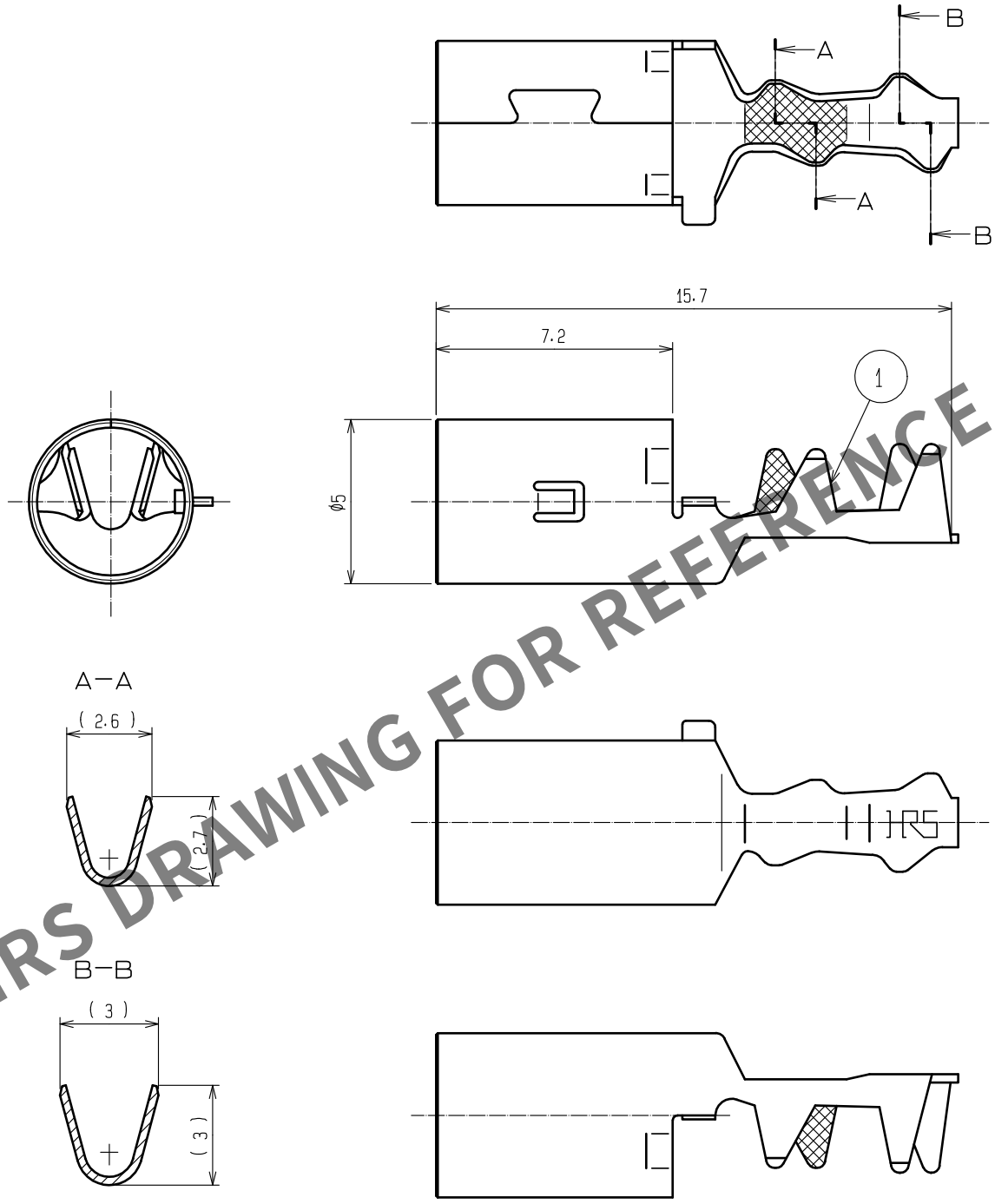

HRS DRAWING FOR REFERENCE

Pb FREE

NO.	MATERIAL	FINISH . REMARKS	NO.	MATERIAL	FINISH . REMARKS
1	PHOSPHOR BRONZE	TIN PLATED			

UNITS mm	SCALE 5 : 1	COUNT	DESCRIPTION OF REVISIONS	DESIGNED	CHECKED	DATE
		0				

HIROSE ELECTRIC CO., LTD.

APPROVED	: NH. NAKATA	15.08.08	DRAWING NO.	EDC-166297-00-00
CHECKED	: KI. HIROKAWA	15.08.08	PART NO.	GT16-/0.7-1.5SC
DESIGNED	: NK. IKUTA	15.08.08	CODE NO.	CL766-0056-4-00
DRAWN	: NK. IKUTA	15.08.08		0 1/1

FORM HC0011-5-51