Apr.1.2024 Copyright 2024 HIROSE ELECTRIC CO., LTD. All Rights Reserved.
In case of consideration for using Automotive equipment / device which demand high reliability, kindly contact our sales window correspondents.

RoHS, ELV COMPLIANT

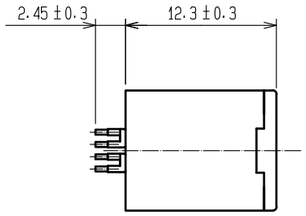

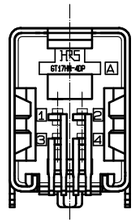

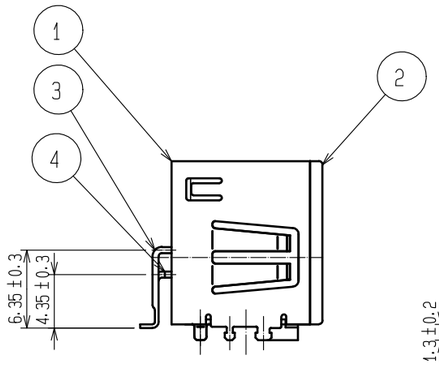

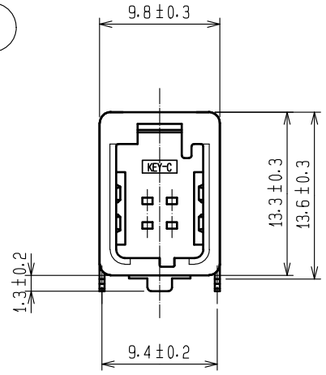

KEY-C

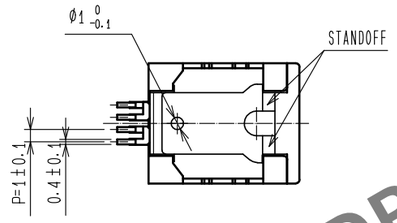

NOTES
1) RECOMMENDED REFLOW PROFILE (SEE RIGHT GRAPF)
   CYCLE TIME: UP TO 2 CYCLES OF REFLOW SOLDERING ARE POSSIBLE UNDER THE CONDITIONS, PROVIDED THAT THERE IS A RETURN TO NOMAL TEMPERATURE BETWEEN THE FIRST AND SECOND CYCLE.
   PEAK TEMPERATURE: 250℃
   230℃ MIN. FOR 20 TO 40 SECONDS.
   PREHEATING AREA 150 TO 180 ℃ FOR 60 TO 120 SECONDS.
2) HAND SOLDERING: 280-300℃, 2S MAX.
3) CONTACT COPLANARITY: 0.1mm MAX.
4) RECOMMENDED THICKNESS OF PCB: 1.2mm
5) RECOMMENDED THICKNESS OF SOLDERING PASTE: 0.12mm

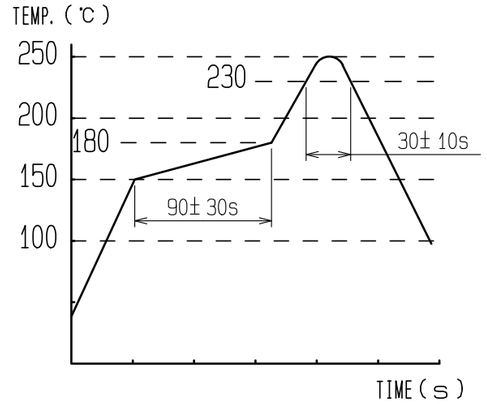

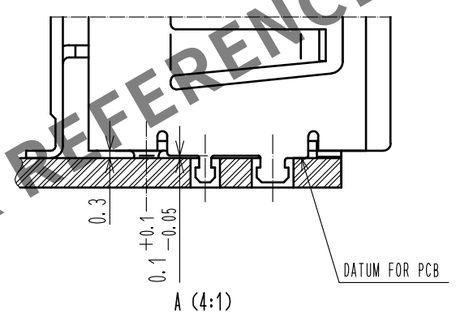

A (4:1)

HRS DRAWING FOR REFERENCE

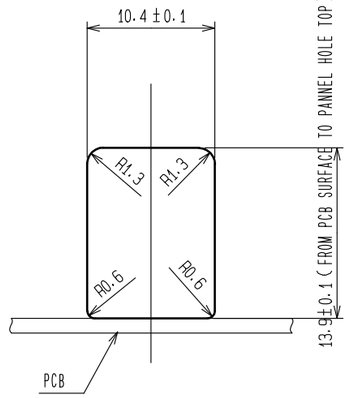

PANNEL LAYOUT

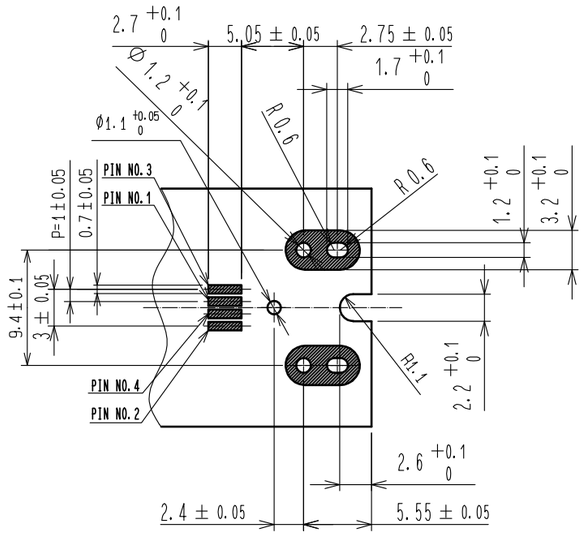

RECOMMENDE PCB LAYOUT

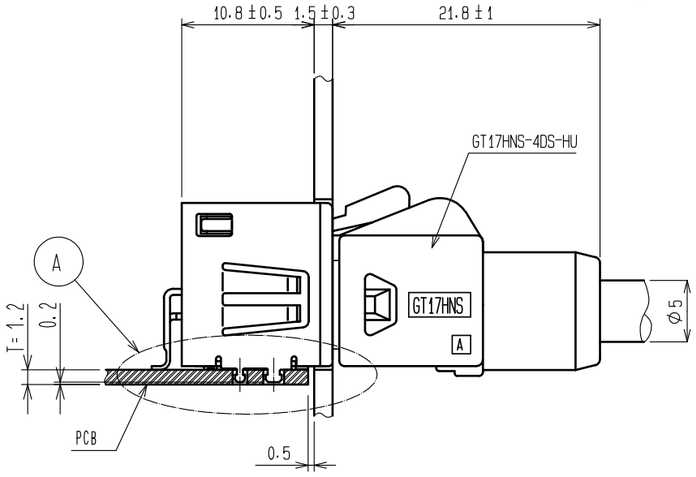

IN COMBINATION WITH STRAIGHT CONNECTOR

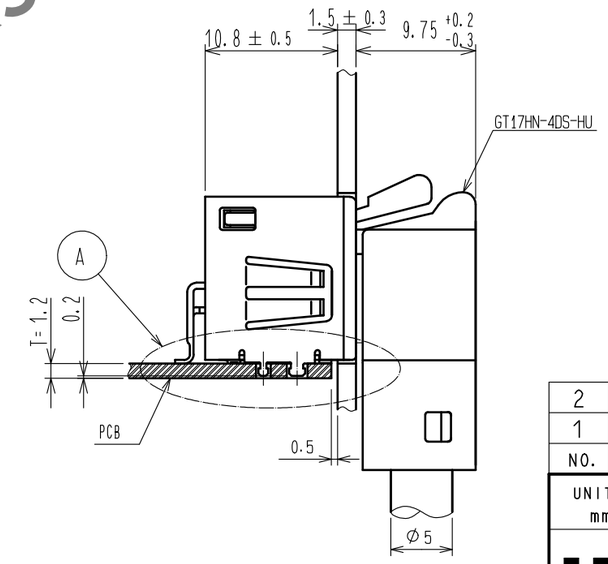

IN COMBINATION WITH RIGHT-ANGLE CONNECTOR

NO.	MATERIAL	FINISH . REMARKS	NO.	MATERIAL	FINISH . REMARKS
2	PPS	BLUE	4	BRASS	TIN PLATING
1	COPPER ALLOY	TIN PLATING	3	BRASS	TIN PLATING

UNITS	SCALE	COUNT	DESCRIPTION OF REVISIONS	DESIGNED	CHECKED	DATE
mm	2 : 1	0				

HRS HIROSE ELECTRIC CO., LTD.

APPROVED	: NH. NAKATA	16. 02. 17	DRAWING NO.	EDC-167011-12-00
CHECKED	: NH. NAKATA	16. 02. 17	PART NO.	GT17HN-4DP-2H(C)(12)
DESIGNED	: MH. SHOUJI	16. 02. 17	CODE NO.	CL767-0176-2-12
DRAWN	: KYUNGHUN. JANG	16. 02. 17		0 1/2

FORM HC0011-5-7

Apr.1.2024 Copyright 2024 HIROSE ELECTRIC CO., LTD. All Rights Reserved.
In case of consideration for using Automotive equipment / device which demand high reliability, kindly contact our sales window correspondents.

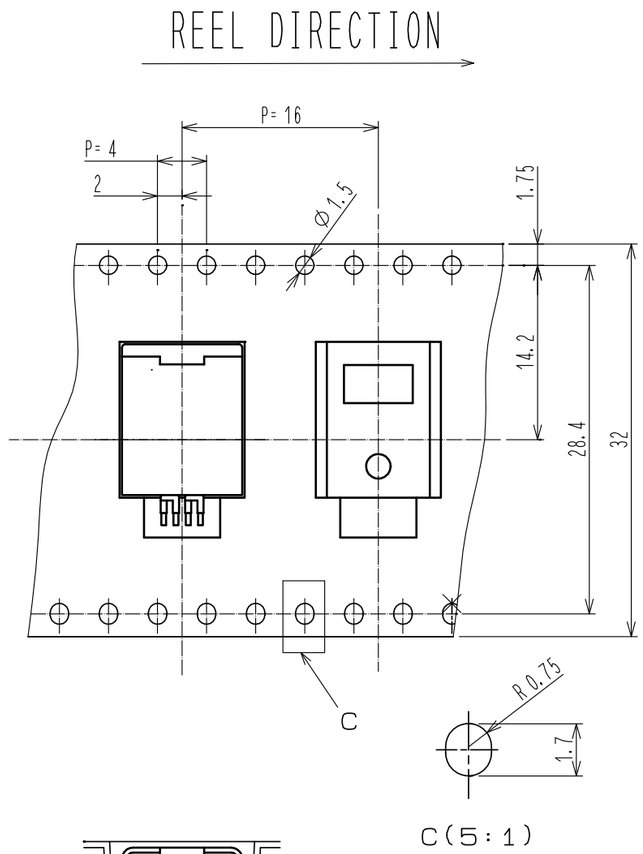

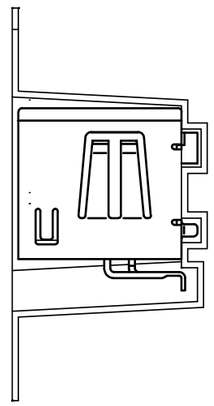

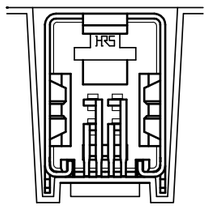

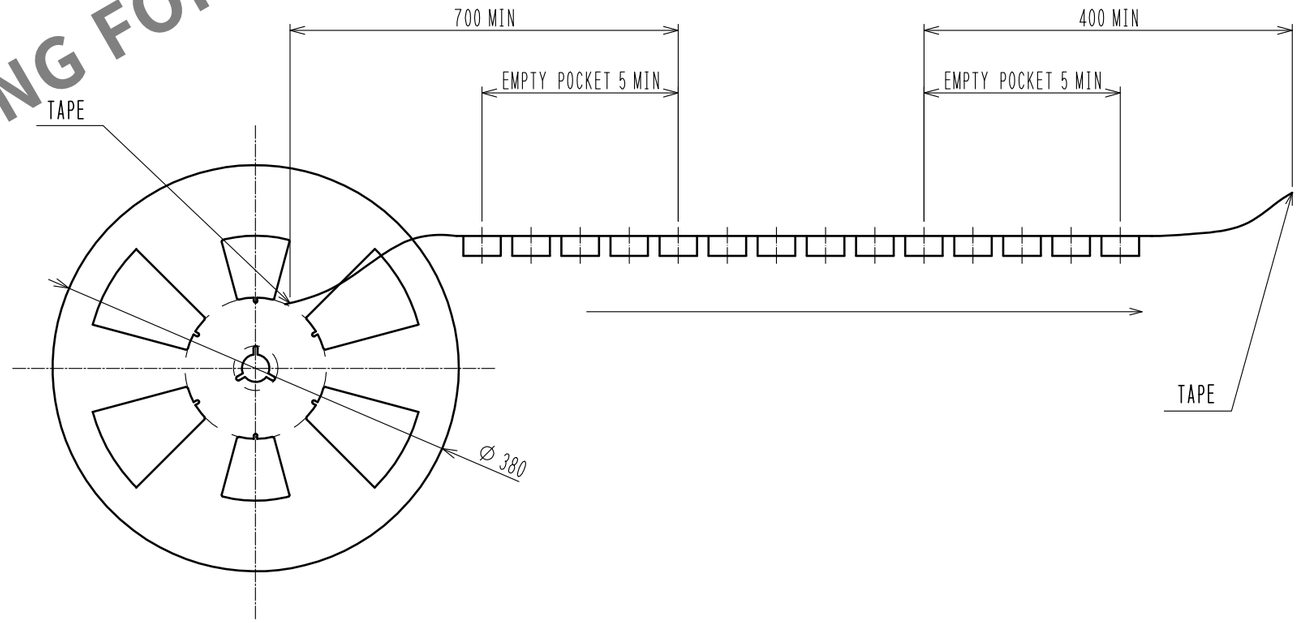

PACKAGE STYLE
300PCS/REEL

HRS DRAWING FOR REFERENCE

DRAWING NO.	EDC-167011-12-00
PART NO.	GT17HN-4DP-2H(C)(12)
CODE NO.	CL767-0176-2-12

0 2/2

FORM HC0011-5-8