Apr.1.2024 Copyright 2024 HIROSE ELECTRIC CO., LTD. All Rights Reserved.
In case of consideration for using Automotive equipment / device which demand high reliability, kindly contact our sales window correspondents.

RoHS, ELV COMPLIANT

NOTES
1) RECOMMENDED REFLOW PROFILE (SEE RIGHT GRAPH)
TYPE:IR REFLOW
ATMOSPHERE: AIR OR N2
CYCLE TIME: UP TO 2 CYCLES OF REFLOW SOLDERING ARE POSSIBLE UNDER THE CONDITIONS, PROVIDED THAT THERE IS A RETURN TO NORMAL TEMPERATURE BETWEEN THE FIRST AND SECOND CYCLE.
PEAK TEMPERATURE: 250℃
230℃ MIN. FOR 20 TO 40 SECONDS.
PREHEATING AREA 150~180℃ FOR 60 TO 120 SECONDS.
2) HAND SOLDERING: 280-300℃, 2S MAX.
3) CONTACT COPLANARITY: 0.1mm MAX.
4) RECOMMENDED THICKNESS OF PCB: 1.6mm
5) RECOMMENDED THICKNESS OF SOLDERING PASTE: 0.15mm

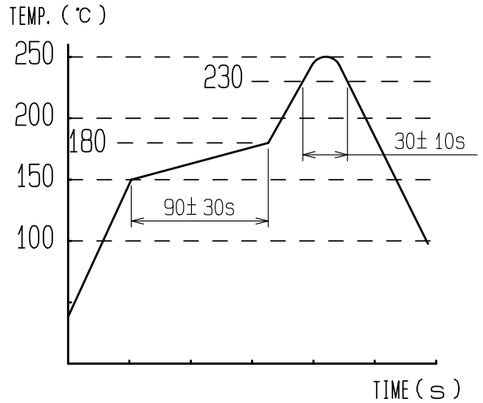

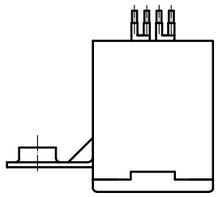

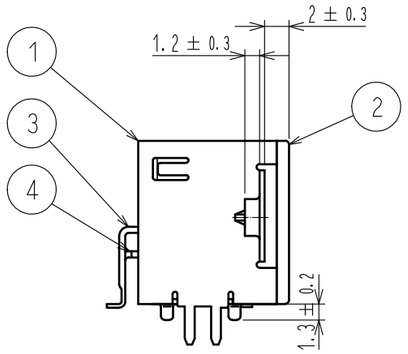

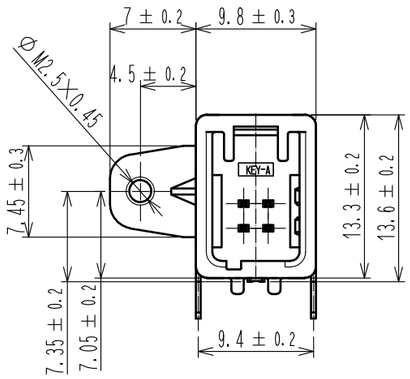

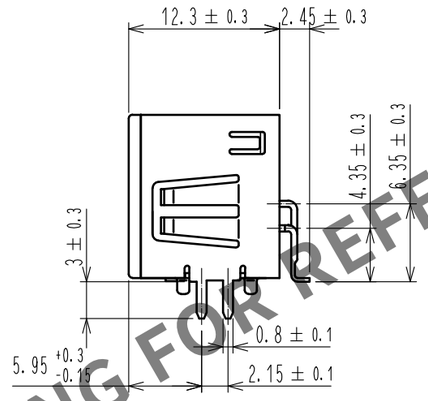

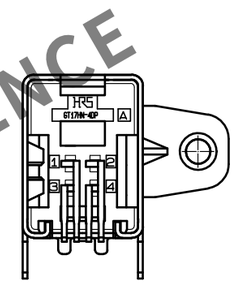

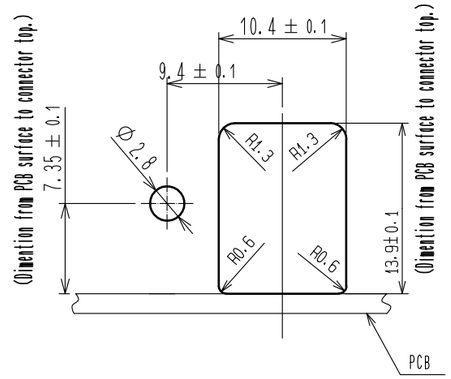

RECOMMENDED PANNEL LAYOUT

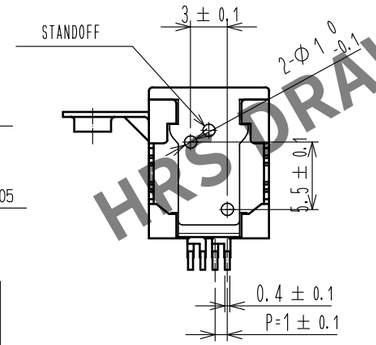

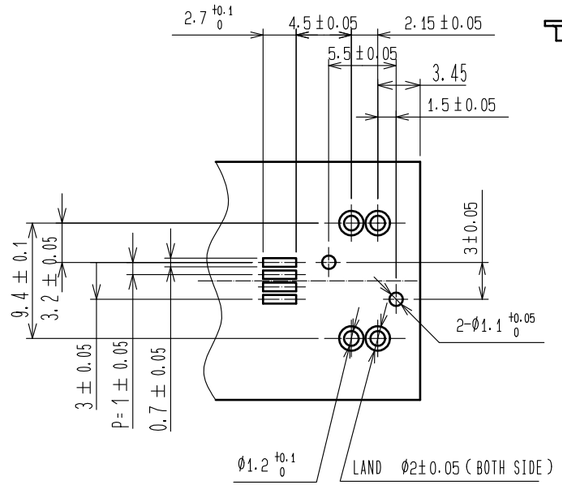

RECOMMENDED PCB LAYOUT

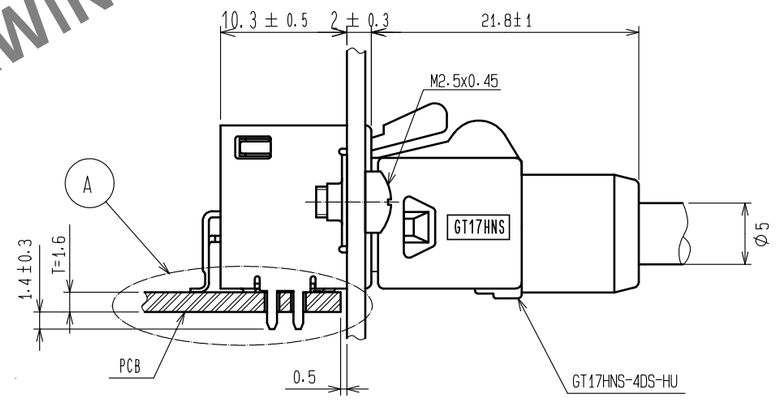

IN COMBINATION WITH STRAIGHT CONNECTOR

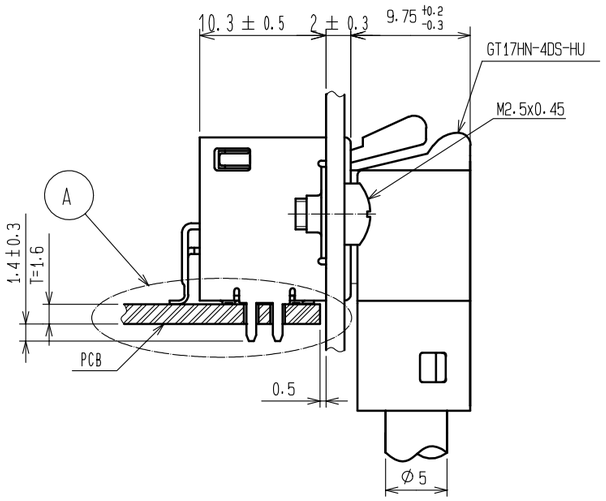

IN COMBINATION WITH RIGHT-ANGLE CONNECTOR

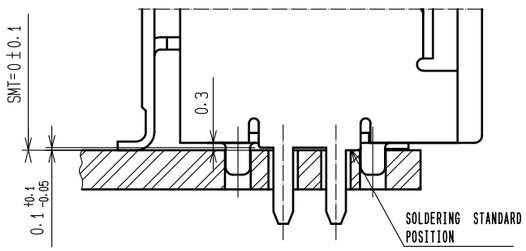

A(4:1)

NO.	MATERIAL	FINISH , REMARKS	NO.	MATERIAL	FINISH , REMARKS
2	PPS	BROWN	4	BRASS	TIN PLATING
1	COPPER ALLOY	TIN PLATING	3	BRASS	TIN PLATING

UNITS mm	SCALE 2 : 1	COUNT	DESCRIPTION OF REVISIONS	DESIGNED	CHECKED	DATE
		0				

HRS HIROSE ELECTRIC CO., LTD.

APPROVED	: KI. HIROKAWA	20200331	DRAWING NO.	EDC-167675-55-00
CHECKED	: EJ. WAKATSUKI	20200330	PART NO.	GT17HNL-4DP-2H(A)(55)
DESIGNED	: TS. KUBOTA	20200325		
DRAWN	: YK. MITSUISHI	20200317	CODE NO.	CL767-0229-7-55

0 1/1

HRS DRAWING FOR REFERENCE