May.1.2024 Copyright 2024 HIROSE ELECTRIC CO., LTD. All Rights Reserved.
In case of consideration for using Automotive equipment / device which demand high reliability, kindly contact our sales window correspondents.

ELV, RoHS COMPLIANT

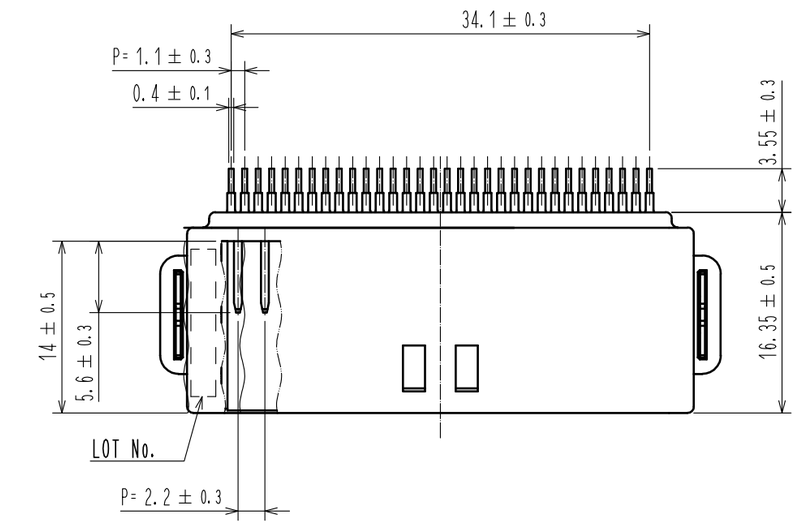

PIN ASSIGNMENT

16 32 15 31 14 30 13 29 12 28 11 27 10 26 9 25 8 24 7 23 6 22 5 21 4 20 3 19 2 18 1 17

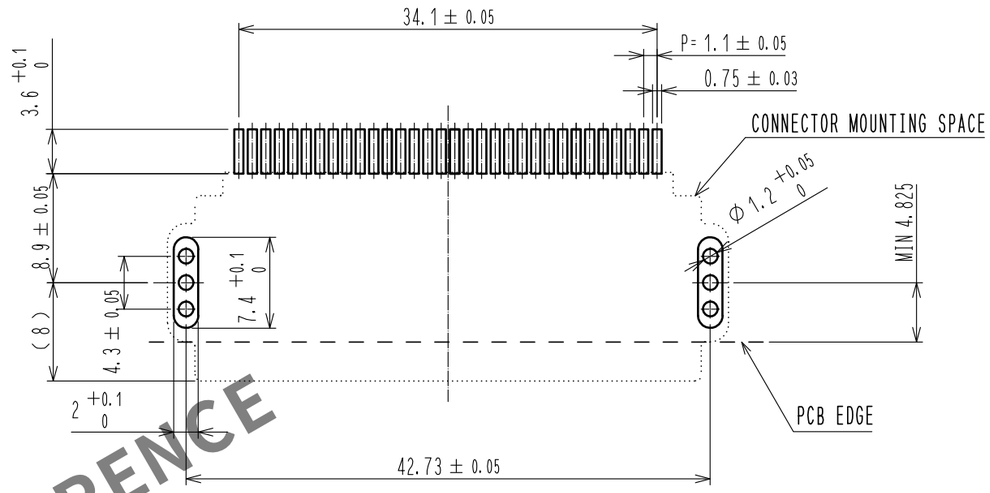

RECOMMENDED PCB PATTERN

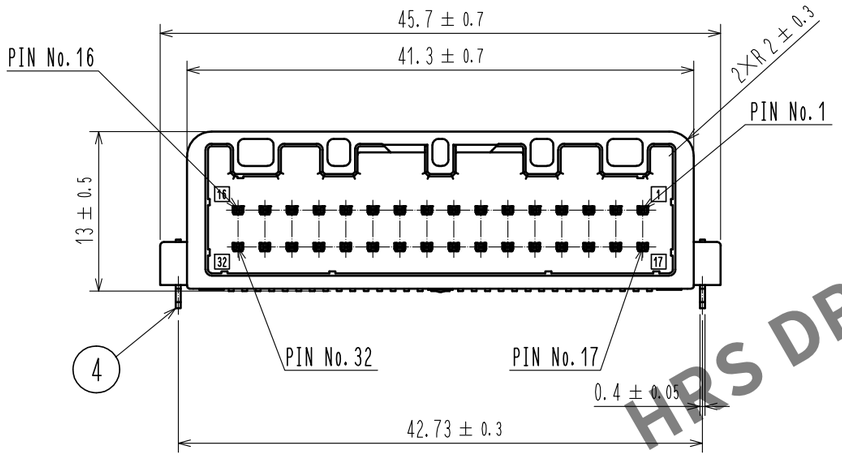

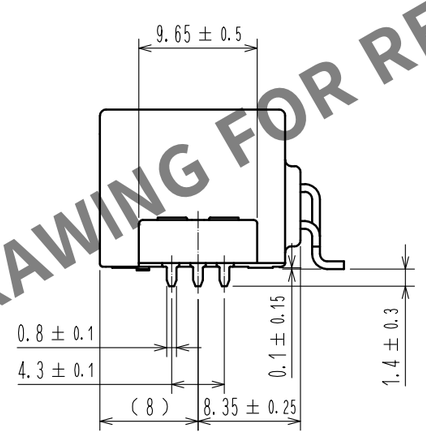

HRS DRAWING FOR REFERENCE

NOTE 1 RECOMMENDED TEMPERATURE PROFILE FOR REFLOW
(REFER TO RIGHT FIG.)
USED REFLOW SYSTEM : IR IN THE AIR OR NITROGEN
NO. OF CYCLES : 2 MAX
PEAK : 250℃
OVER 230℃ : 20~40s
PREHEAT : 150~180℃
60~120s

2 TEMPERATURE FOR SOLDERING IRON
: 280~300℃ WITHIN 2s

3 CO-PLANARITY OF PIN SHALL BE 0.1mm MAX.

4 RECOMMENDED PCB THICKNESS IS 1.6mm.

5 RECOMMENDED SOLDER THICKNESS IS 0.15mm.

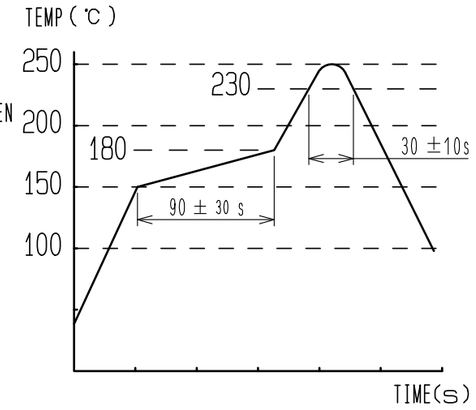

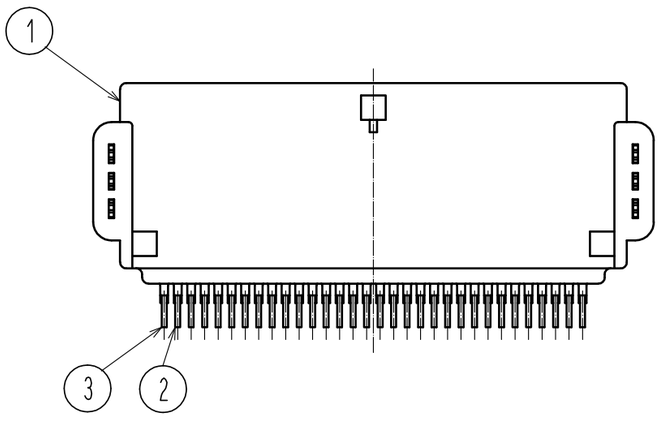

NO.	MATERIAL	FINISH , REMARKS	NO.	MATERIAL	FINISH , REMARKS
3	BRASS	TIN PLATED	6	PET	
2	BRASS	TIN PLATED	5	PS	
1	PA	BLACK	4	BRASS	TIN PLATED

UNITS	SCALE	COUNT	DESCRIPTION OF REVISIONS	DESIGNED	CHECKED	DATE
mm	2 : 1	1	DIS-T-00006626	DONGCHAN KIM	HH. TSUKUMO	20200902

HRS HIROSE ELECTRIC CO., LTD.

APPROVED	: AR. SHIRAI	20180530	DRAWING NO.	EDC-361159-10-00
CHECKED	: HS. OZAWA	20180530	PART NO.	GT25H2-32DP-2.2H(10)
DESIGNED	: YT. HAYAKAWA	20180530	CODE NO.	CL775-0086-6-10
DRAWN	: DS. HIROWATARI	20180529		2 1/2

FORM HC0011-5-7

May.1.2024 Copyright 2024 HIROSE ELECTRIC CO., LTD. All Rights Reserved.
In case of consideration for using Automotive equipment / device which demand high reliability, kindly contact our sales window correspondents.

PACKAGING SPECIFICATION

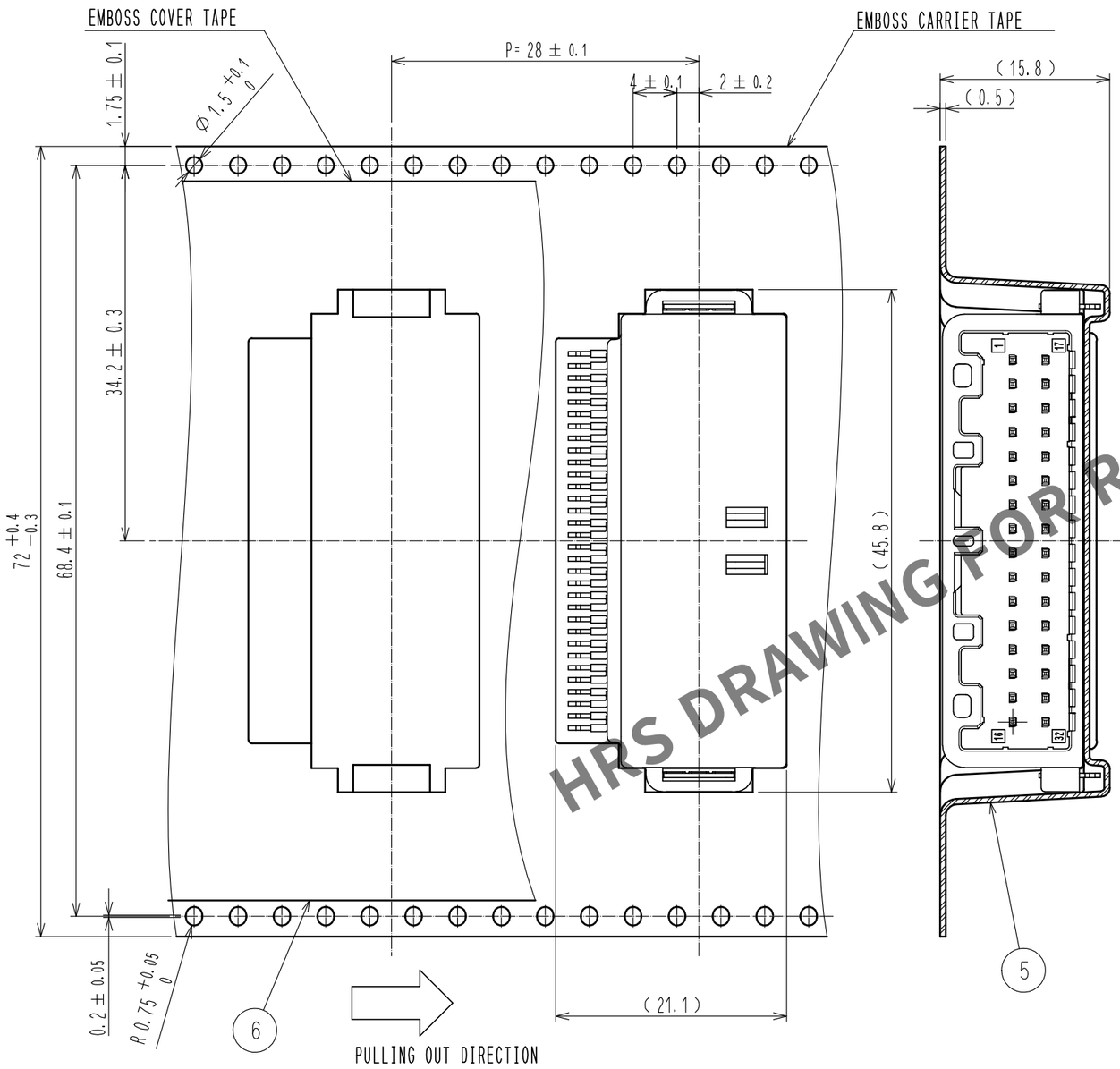

⚠2 REEL DIMENSION (FREE)

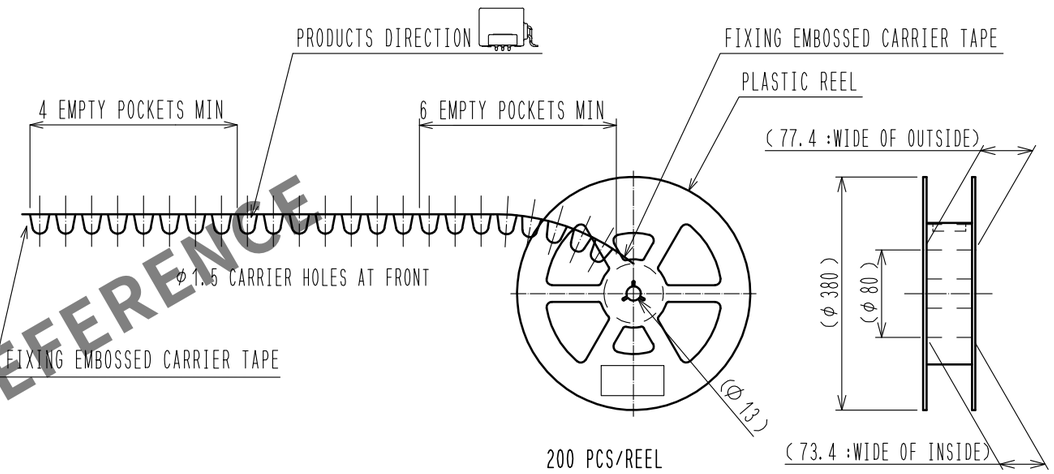

CARDBOARD DIMENSION(FREE)

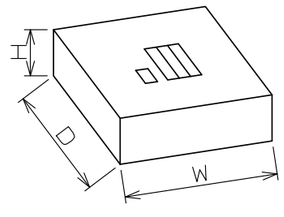

BOX SIZE
W=(405)(mm)
D=(405)(mm)
H=(63) (mm)

1REEL/BOX

HRS DRAWING FOR REFERENCE

HRS	DRAWING NO.	EDC-361159-10-00
	PART NO.	GT25H2-32DP-2.2H(10)
	CODE NO.	CL775-0086-6-10 ⚠2 2/2