Apr.1.2024 Copyright 2024 HIROSE ELECTRIC CO., LTD. All Rights Reserved.
In case of consideration for using Automotive equipment / device which demand high reliability, kindly contact our sales window correspondents.

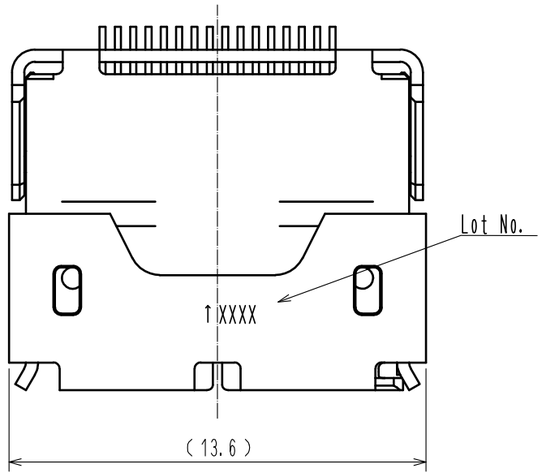

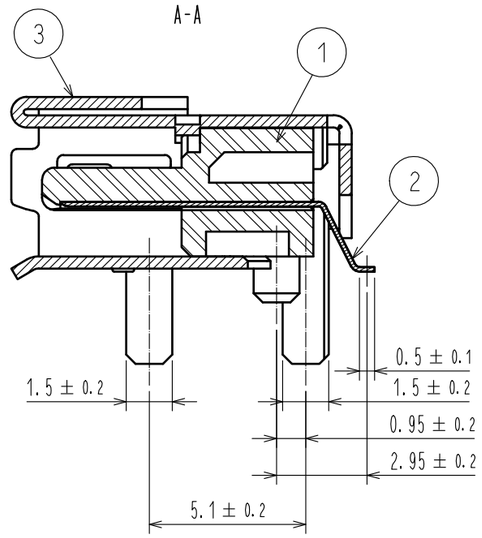

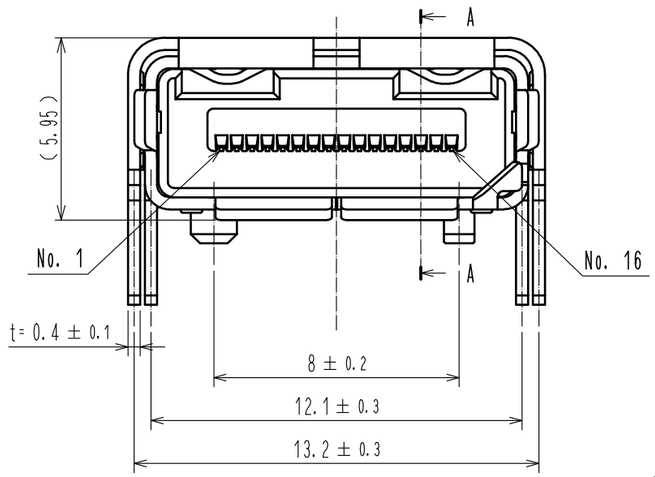

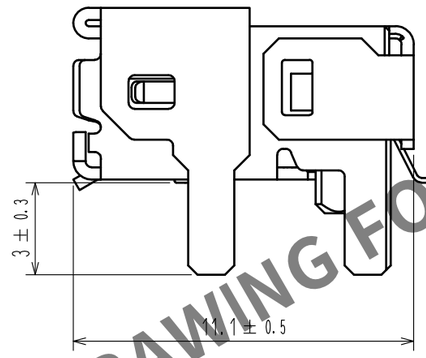

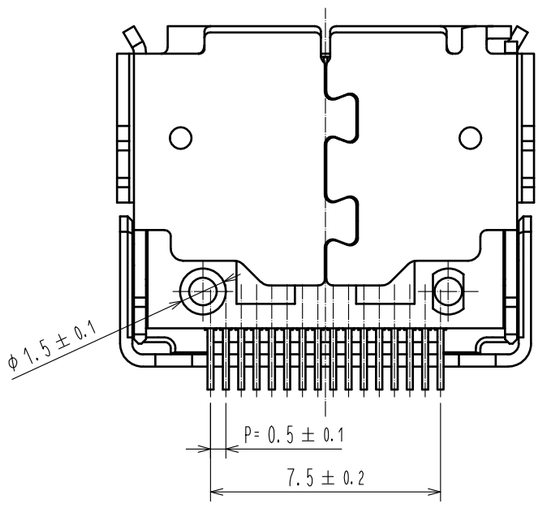

Parts list

Part No	Parts name	Qty/IR2	Material
1	P Housing	1	PA
2	P Contact	16	2 Copper Alloy
3	Metal Shell	1	3 Stainless Steel
4	Embossed Carrier Tape	-	PS (Clear)
5	Top Cover Tape	-	PET (Clear)

Pin layout

Pin No	Pin name	I/O	Pin No	Pin name	I/O
1	VDD	POWER	9	GND	GND
2	VDD	POWER	10	EO-DATA-	INPUT
3	GRN-LEDn	INPUT	11	EO-DATA+	INPUT
4	OE-SDn	OUTPUT	12	GND	GND
5	ANDATA	OUTPUT	13	EO-ACT	INPUT
6	GND	GND	14	EO-ACTn	OUTPUT
7	OE-DATA-	OUTPUT	15	AMB-LEDn	INPUT
8	OE-DATA+	OUTPUT	16	NC	-

NOTE 1 All lead co-planarity shall be 0.1mm maximum.

2 Contact plating
- Contact area: Au
- SMT area : Au

3 Shell plating
- All area : Sn

4 The peeling strength of cover tape shall comply with IEC 60286-3.

5 Embossed carrier tape has sprocket holes on one side.

6 Recommended land pattern is shown. Please do not arrange any via without resist in the hatching part shown in the figure.

7 The shell should be implemented with selective wave soldering.

8 Mounting the shell on the rear surface, please fix it to the board to prevent falling through the reflow process.

9 As for part No.3 the performance does not effect even if there are rubbing wounds by the assembly process. And the performance does not effect though there might be a difference in the plating luster between each plating lots.

HRS DRAWING FOR REFERENCE

NO.	MATERIAL	FINISH , REMARKS	NO.	MATERIAL	FINISH , REMARKS

UNITS mm	SCALE 5 : 1	COUNT	DESCRIPTION OF REVISIONS	DESIGNED	CHECKED	DATE
		0				

HIROSE ELECTRIC CO., LTD.

APPROVED	: YY. HIYAMA	20200907	DRAWING NO.	EDC-384993-01-00
CHECKED	: TS. YAMAZAKI	20200907	PART NO.	BF4-IR2-16P-0.5SH(01)
DESIGNED	: TY. SATO	20200907	CODE NO.	CL831-1020-0-01
DRAWN	: SK. AOYAMA	20200907		0 1/3

FORM HC0011-5-7

Apr.1.2024 Copyright 2024 HIROSE ELECTRIC CO., LTD. All Rights Reserved.
In case of consideration for using Automotive equipment / device which demand high reliability, kindly contact our sales window correspondents.

Dimension of embossed carrier tape (Scale: free)

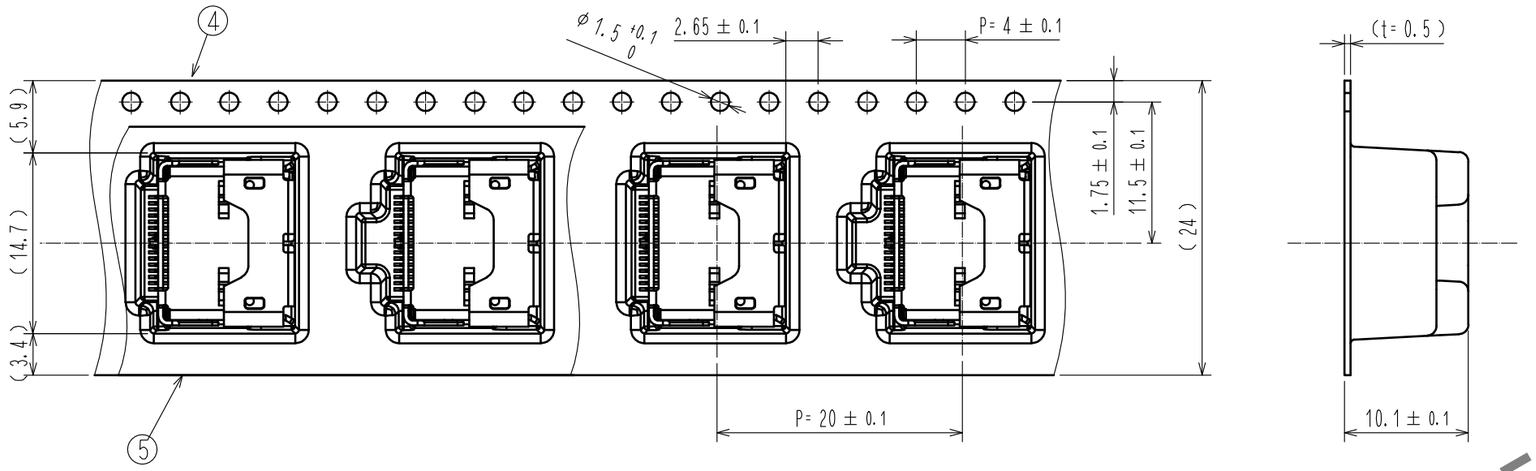

Recommended reflow temperature profile using Lead-Free solder paste.

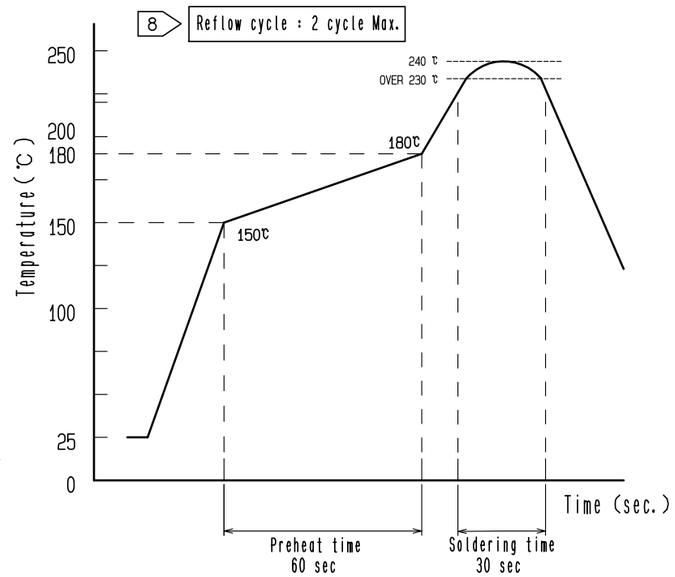

HRS DRAWING FOR REFERENCE

Packing style (Scale : FREE)

10 pcs. per pack

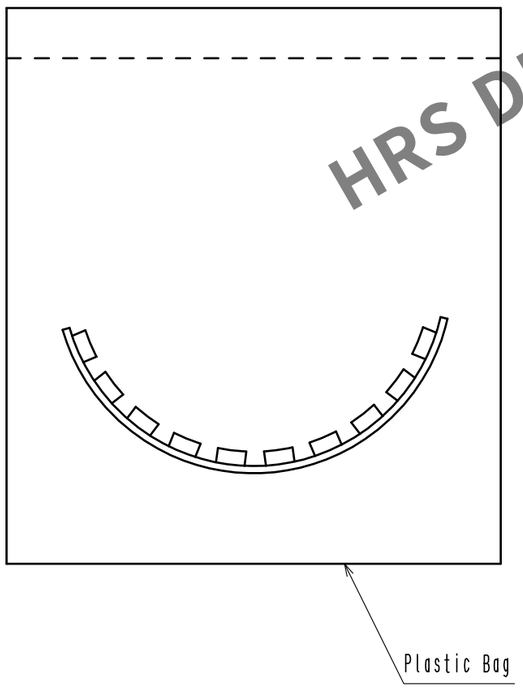

6 Recommended PCB land pattern (Scale: free)
(PCB thickness: 2.4mm)

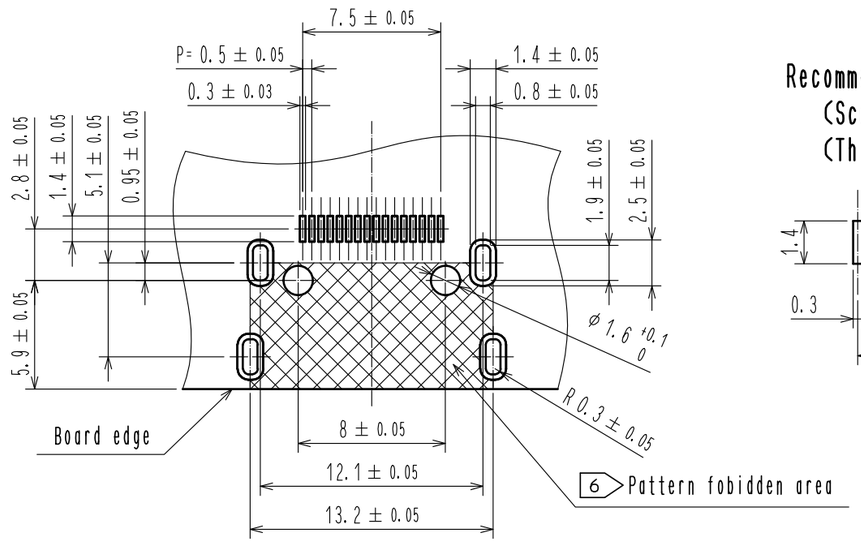

Recommended stencil dimensions
(Scale: free)
(Thickness: 120μm)

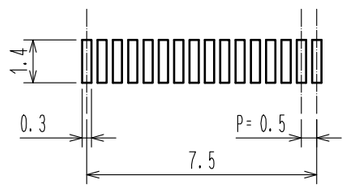

HRS	DRAWING NO.	EDC-384993-01-00
	PART NO.	BF4-IR2-16P-0.5SH(01)
	CODE NO.	CL831-1020-0-01

0 2/3

Apr.1.2024 Copyright 2024 HIROSE ELECTRIC CO., LTD. All Rights Reserved.
In case of consideration for using Automotive equipment / device which demand high reliability, kindly contact our sales window correspondents.

Mated Condition free

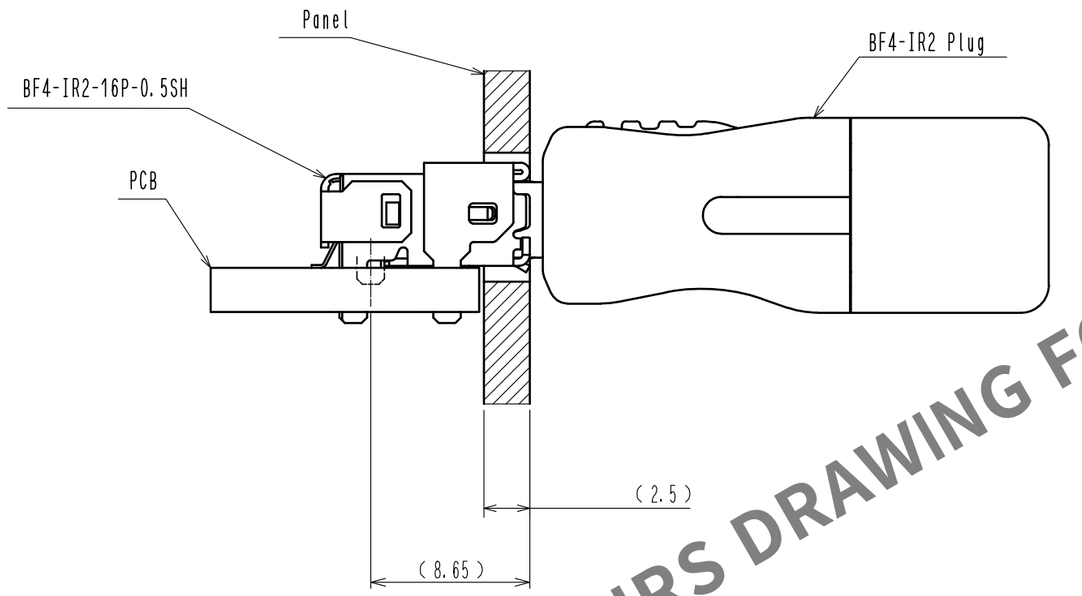

Panel Cutout free

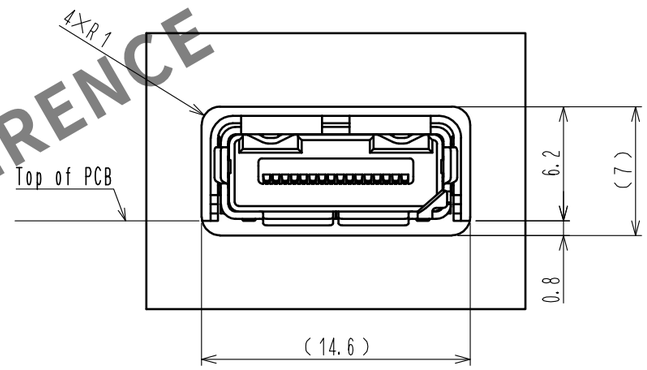

HRS DRAWING FOR REFERENCE

DRAWING NO.	EDC-384993-01-00
PART NO.	BF4-IR2-16P-0.5SH(01)
CODE NO.	CL831-1020-0-01

△0 3/3

FORM HC0011-5-8