Apr.1.2026 Copyright 2026 HIROSE ELECTRIC CO., LTD. All Rights Reserved.
In case of consideration for using Automotive equipment / device which demand high reliability, kindly contact our sales window correspondents.

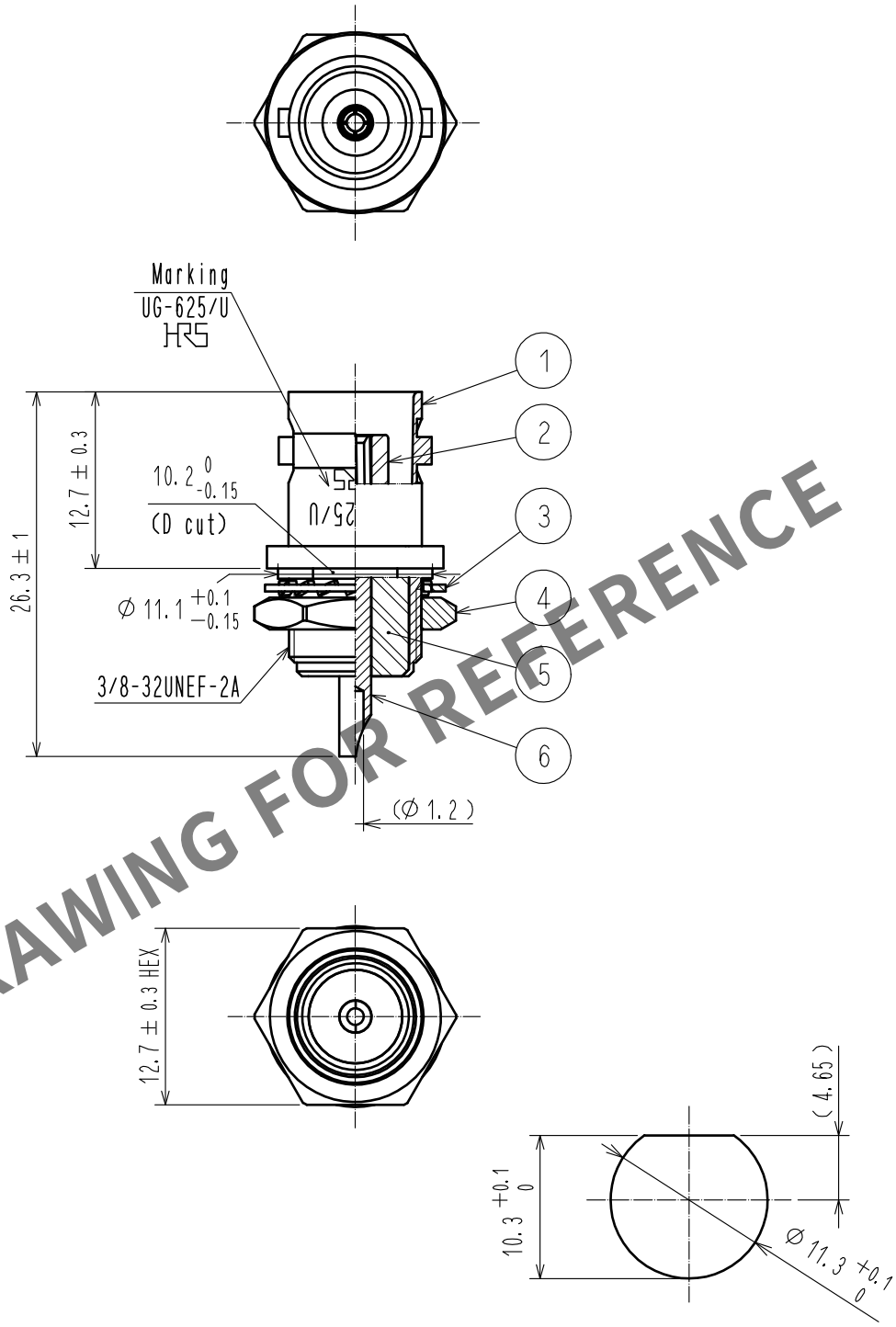

HRS DRAWING FOR REFERENCE

NO.	MATERIAL	FINISH . REMARKS	NO.	MATERIAL	FINISH . REMARKS
3	STEEL	SILVER PLATING	6	BERYLLIUM COPPER	SILVER PLATING
2	PTFE		5	PTFE	
1	BRASS	SILVER PLATING	4	BRASS	SILVER PLATING

UNITS mm	SCALE 2 : 1	COUNT	DESCRIPTION OF REVISIONS	DESIGNED	CHECKED	DATE
		0				

HIROSE ELECTRIC CO., LTD.

APPROVED	: NK. NINOMIYA	20211008	DRAWING NO.	EDC-000741-40-00
CHECKED	: NK. NINOMIYA	20211008	PART NO.	UG-625/U(40)
DESIGNED	: MT. KANEKO	20211008	CODE NO.	CL0302-0017-0-40
DRAWN	: NK. OOSHIMA	20211008		0 1/1

FORM HC0011-5-51