Jun.1.2024 Copyright 2024 HIROSE ELECTRIC CO., LTD. All Rights Reserved.
In case of consideration for using Automotive equipment / device which demand high reliability, kindly contact our sales window correspondents.

	COUNT	DESCRIPTION OF REVISIONS	B Y	CHKD	DATE		COUNT	DESCRIPTION OF REVISIONS	B Y	CHKD	DATE
△						△					
△						△					
△						△					

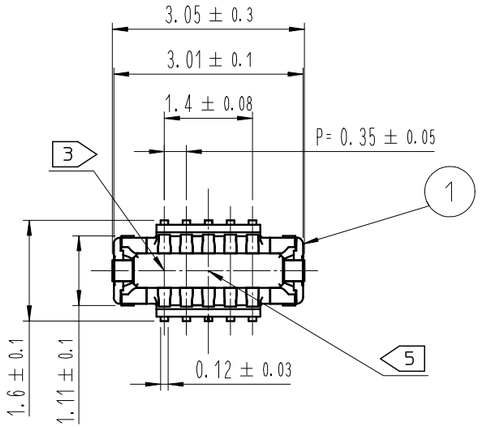

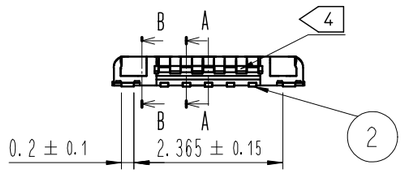

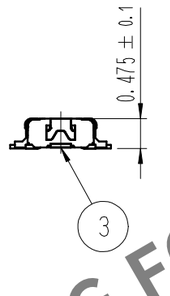

ENGAGEMENT FIGURE (50:1)

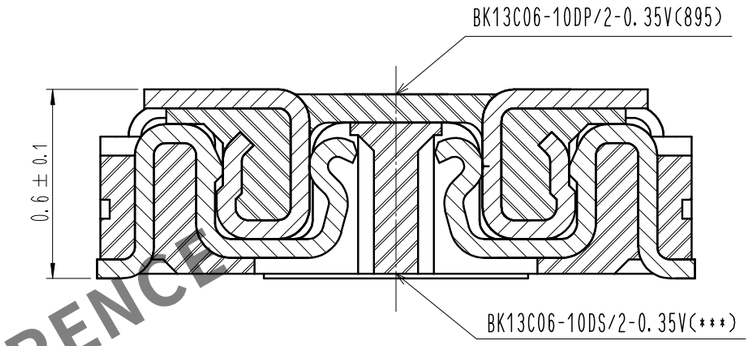

SIGNAL CONTACT

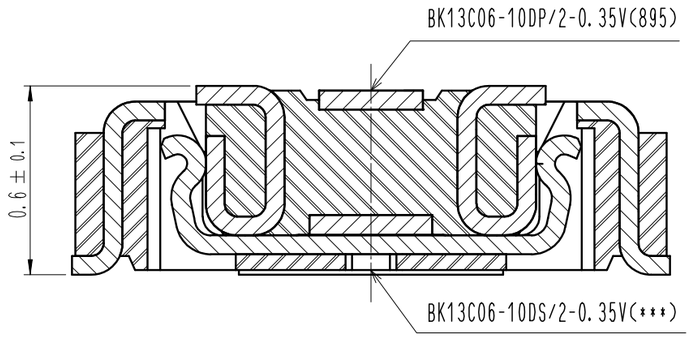

POWER CONTACT

A-A (30:1)

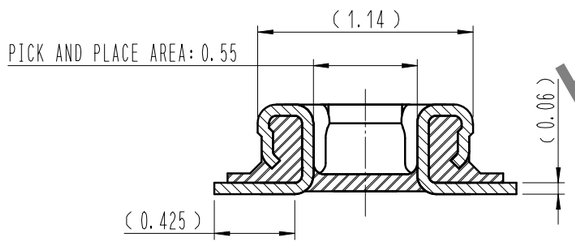

B-B (30:1)

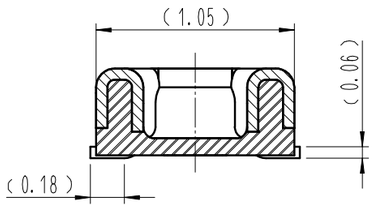

HRS DRAWING FOR REFERENCE

NOTE
1. ALL LEAD CO-PLANARITY SHALL BE 0.08mm MAX.
2: CONTACT PLATING SPECIFICATIONS
CONTACT AREA : GOLD 0.05μm MIN
SMT LEAD : GOLD 0.05μm MIN
UNDERPLATING : NICKEL 1μm MIN
(SURFACE : SEALING)
3: CAV NO. ARE INDICATED IN APPROX POSITION SHOWN.
4: A PART OF THE WALL COULD BE NOTCHED
5: DENT EXISTS IN THE INDICATED AREA FOR MANUFACTURING CONVENIENCE.

NO.	MATERIAL	FINISH , REMARKS	NO.	MATERIAL	FINISH , REMARKS
4	PS	CLEAR (EMBOSSED CARRIER TAPE)			
3	COPPER ALLOY	2			
2	COPPER ALLOY	2	6	PS	BLACK (PLASTIC REEL)
1	LCP	UL94 V-0, BLACK	5	POLYESTER	CLEAR (COVER TAPE)

REMARKS	DRAWN	DESIGNED	CHECKED	APPROVED	RELEASED
	S. H. PARK 20. 10. 05	S. H. PARK 20. 10. 05	H. W. JO 20. 10. 05	H. W. JO 20. 10. 05	20. 10. 05

CODE NO. (OLD)	DRAWING NO. EDC3-633003-95	PART NO. BK13C06-10DP/2-0.35V(895)	
SCALE 10:1 / UNITS mm	HRS HIROSE KOREA CO., LTD.	CODE NO CL 6665-0034-7-895	1/3

Jun.1.2024 Copyright 2024 HIROSE ELECTRIC CO., LTD. All Rights Reserved.
In case of consideration for using Automotive equipment / device which demand high reliability, kindly contact our sales window correspondents.

7 ◈ RECOMMENDED PCB LAYOUT

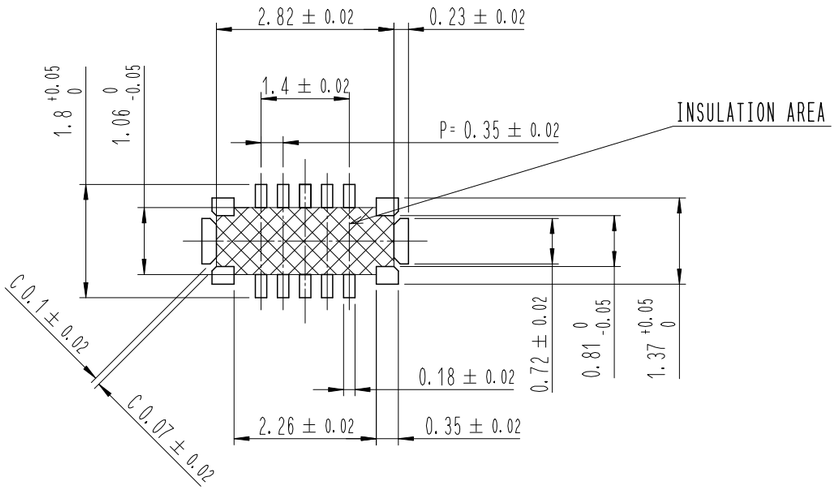

◈ RECOMMENDED METAL MASK DIMENSIONS

METAL MASK THICKNESS : 80μm

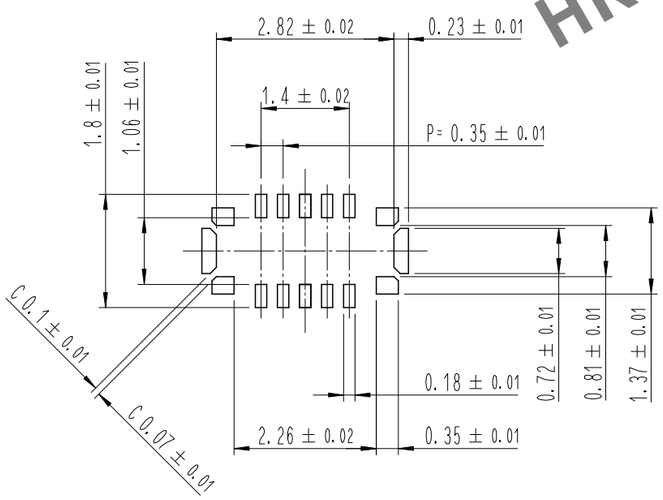

6 RECOMMENDED REFLOW TEMPERATURE PROFILE USING LEAD-FREE SOLDER PASTE.

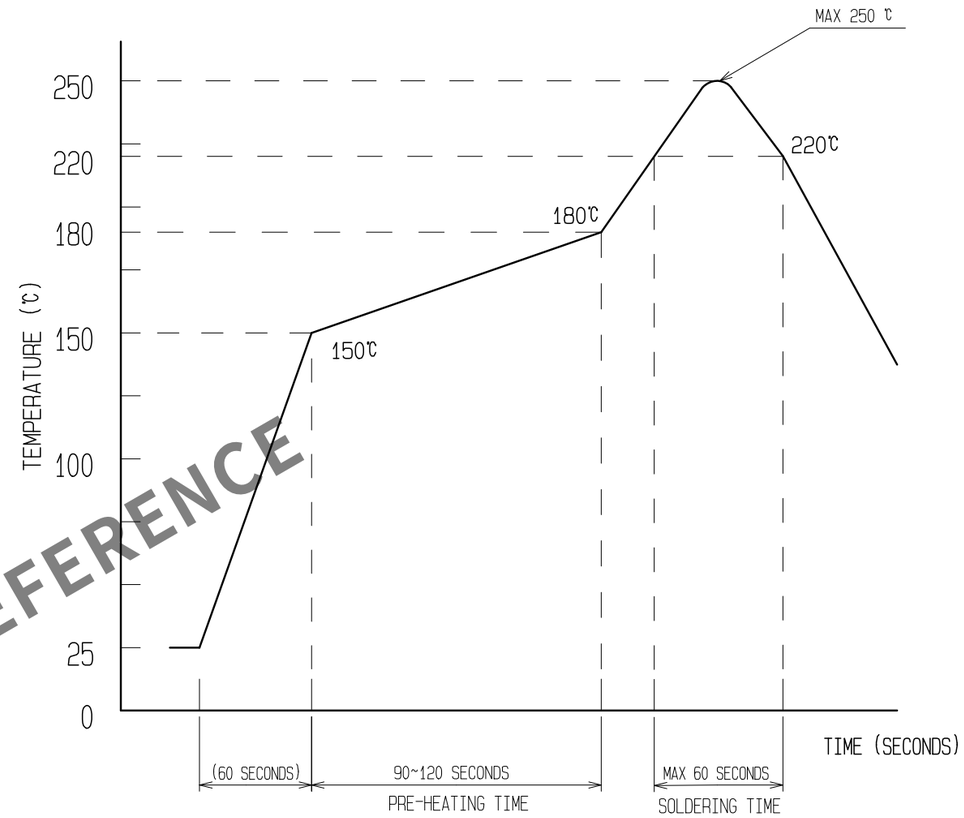

REFLOW METHOD : N_2 REFLOW
NUMBER OF REFLOW CYCLES : 2 CYCLES MAX.
1) REFLOW TIME
DURATION ABOVE 220℃, 60 SEC MAX.
(PEAK TEMPERATURE : 250℃ MAX)
2) PRE-HEAT TIME
PRE-HEAT TEMPERATURE(MIN): 150℃
PRE-HEAT TEMPERATURE(MAX): 180℃
PRE-HEAT TIME: 90-120 SEC.

6. THIS TEMPERATURE PROFILE IS PER THE CONDITIONS SHOWN ABOVE. ADDITIONAL FACTORS SUCH AS SOLDER PASTE TYPE, PCB SIZE AND OTHER MOUNTED COMPONENTS COULD AFFECT THE PROFILE. THEREFORE, A THOROUGH EVALUATION OF MOUNTING CONDITION IS REQUIRED PRIOR TO PRODUCTION. TEMPERATURE IS MEASURED AT CONTACT LEAD.
7. PLEASE CONTACT US IN CASE YOU WILL MAKE DIFFERENT SETTINGS FROM OUR RECOMMENDATION.
8. THIS PRODUCT SATISFIES HALOGEN FREE REQUIREMENTS DEFINED AS 900ppm MAXIMUN CHLORINE, 900ppm MAXIMUM BROMINE, AND 1500ppm MAXIMUM TOTAL OF CHLORINE AND BROMINE.
9. THIS PRODUCT COMPLY WITH RoHS.

HRS DRAWING FOR REFERENCE

SCALE 10:1	DRAWING NO. EDC3-633003-95	PART NO. BK13C06-10DP/2-0.35V(895)	
UNITS mm	HRS HIROSE KOREA CO., LTD.	CODE NO CL 6665-0034-7-895	2/3

Jun.1.2024 Copyright 2024 HIROSE ELECTRIC CO., LTD. All Rights Reserved.
In case of consideration for using Automotive equipment / device which demand high reliability, kindly contact our sales window correspondents.

EMBOSSED CARRIER TAPE PACKAGING (5:1)

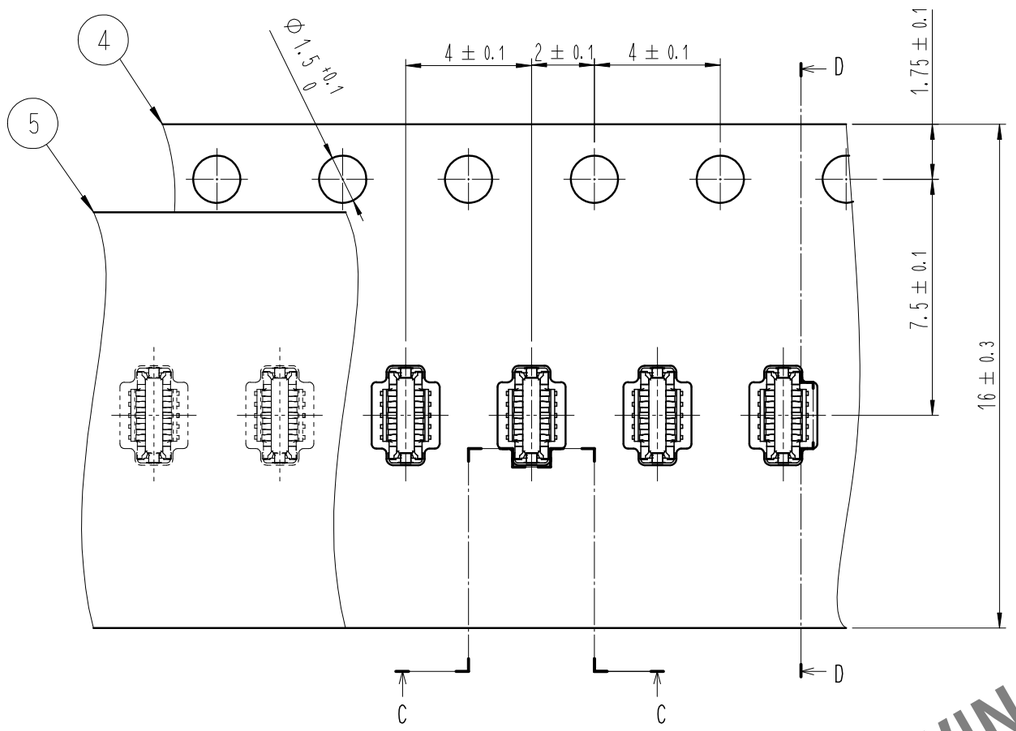

D-D (5:1)

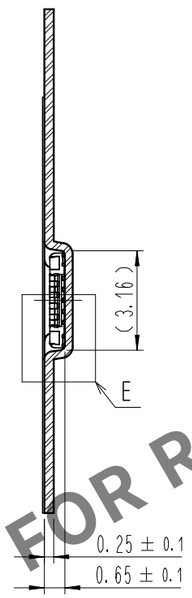

STYLE AND DIMENSION OF REEL (FREE)

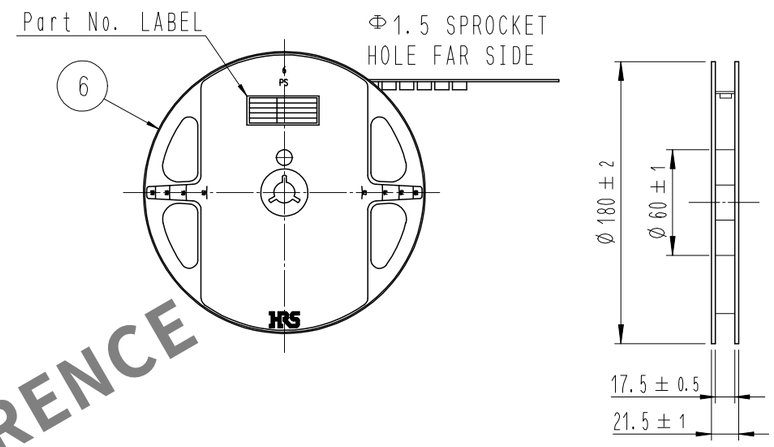

DETAIL OF PART No. LABEL

SUPPLIER
QUANTITY
PART NO.
CODE NO.
DATE OF MANUFACTURED

生産月日	年　月　日
図番	** ** **
品名	BK13C06-10DP/2-0.35V(895)
納入数量	1,000個
納入者	HIROSE KOREA

C-C (5:1)

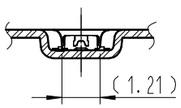

DIRECTION OF UNREELING

E (10:1)

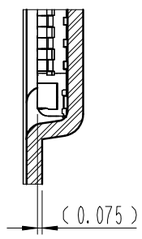

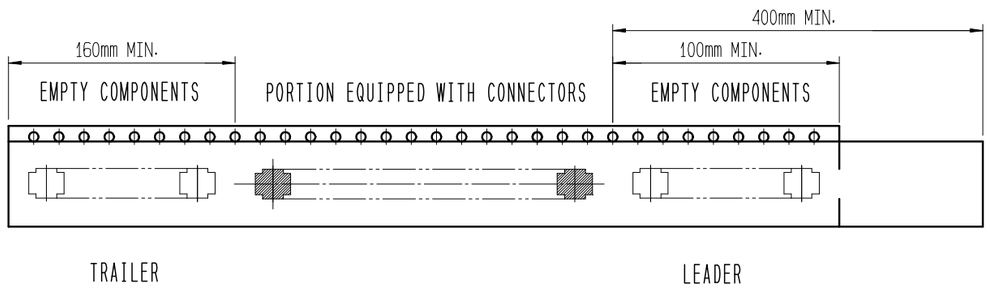

12 TAPING(FREE)

10 . PER REEL 1,000 CONNECTORS.
11 . THE DIMENSIONS IN PARENTHESES ARE FOR REFERENCE.
12 . REFER TO JIS C 0806, IEC-60286-3 (PACKAGING OF COMPONENTS FOR AUTOMATIC HANDLING)

HRS DRAWING FOR REFERENCE

SCALE 10:1	DRAWING NO. EDC3-633003-95	PART NO. BK13C06-10DP/2-0.35V(895)	
UNITS mm	HRS HIROSE KOREA CO., LTD.	CODE NO CL 6665-0034-7-895	3/3