Jun.1.2024 Copyright 2024 HIROSE ELECTRIC CO., LTD. All Rights Reserved.
In case of consideration for using Automotive equipment / device which demand high reliability, kindly contact our sales window correspondents.

	COUNT	DESCRIPTION OF REVISIONS	BY	CHKD	DATE		COUNT	DESCRIPTION OF REVISIONS	BY	CHKD	DATE
△					. .	△					. .
△					. .	△					. .
△					. .	△					. .

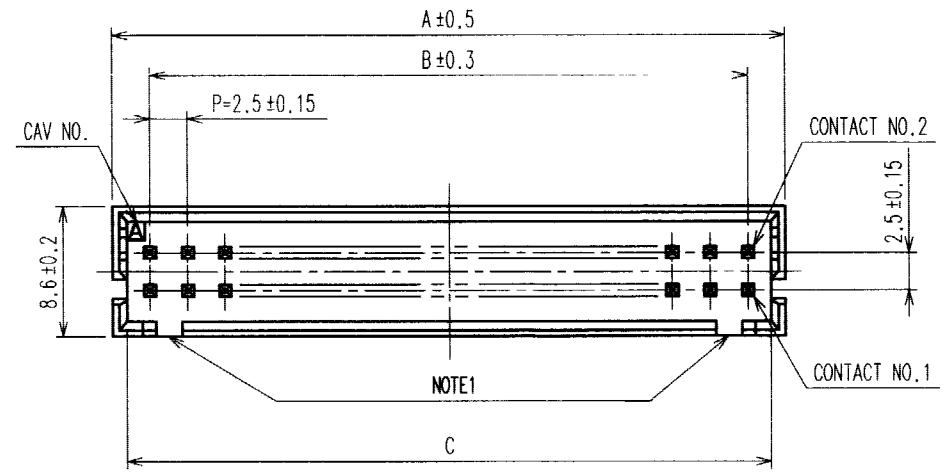

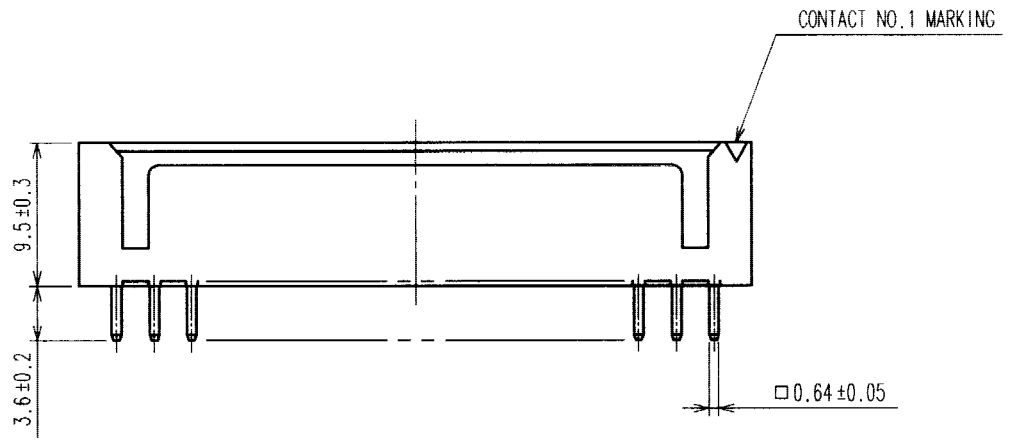

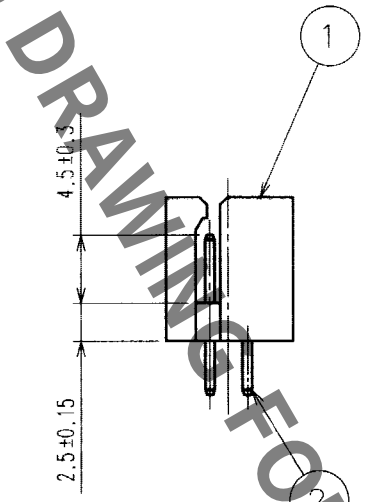

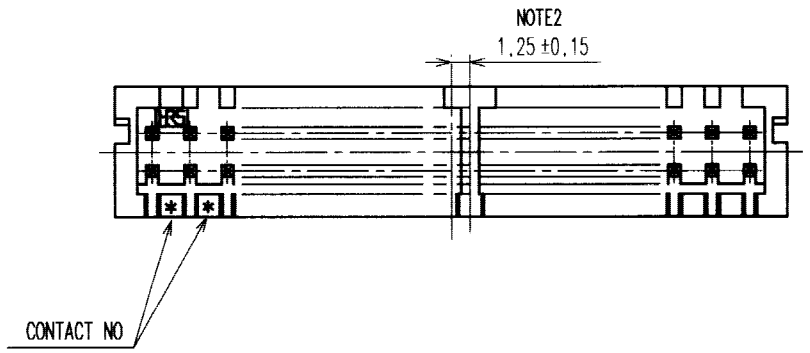

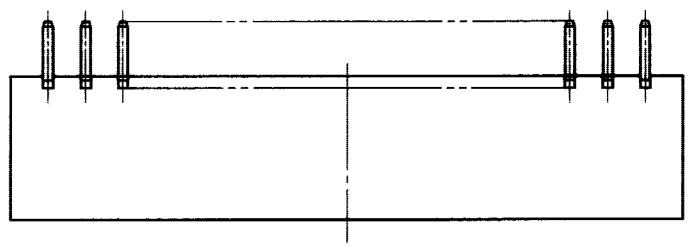

NOTE1: 4 POSITIONS AND 6 POSITIONS HEADERS HAVE ONE POLARIZING SLOT AT CENTER. OTHER POSITIONS HAVE 2 POLARIZING SLOTS AS PER DRAWING.

NOTE2: WHEN THE NUMBERS OF CONTACTS OF FIRST ROW IS ODD, THE STAND-OFF SHIFTS 1.25 RIGHTWARD. (STAND-OFF AVAILABLE FROM 8 POSITIONS UP.)

HRS NO.	PART NO.	NUMBER OF CONTACT	A	B	C
CL541-0651-5-01	DF1B- 4DP-2.5DSA(01)	4	7.5	2.5	5.6
CL541-0652-8-01	DF1B- 6DP-2.5DSA(01)	6	10.0	5.0	8.1
CL541-0653-0-01	DF1B- 8DP-2.5DSA(01)	8	12.5	7.5	10.6
CL541-0616-4-01	DF1B-10DP-2.5DSA(01)	10	15.0	10.0	13.1
CL541-0617-7-01	DF1B-12DP-2.5DSA(01)	12	17.5	12.5	15.6
CL541-0618-0-01	DF1B-14DP-2.5DSA(01)	14	20.0	15.0	18.1
CL541-0619-2-01	DF1B-16DP-2.5DSA(01)	16	22.5	17.5	20.6
CL541-0620-1-01	DF1B-18DP-2.5DSA(01)	18	25.0	20.0	23.1
CL541-0621-4-01	DF1B-20DP-2.5DSA(01)	20	27.5	22.5	25.6
CL541-0622-7-01	DF1B-22DP-2.5DSA(01)	22	30.0	25.0	28.1
CL541-0623-0-01	DF1B-24DP-2.5DSA(01)	24	32.5	27.5	30.6
CL541-0624-2-01	DF1B-26DP-2.5DSA(01)	26	35.0	30.0	33.1
CL541-0625-5-01	DF1B-28DP-2.5DSA(01)	28	37.5	32.5	35.6
CL541-0626-8-01	DF1B-30DP-2.5DSA(01)	30	40.0	35.0	38.1
CL541-0628-3-01	DF1B-34DP-2.5DSA(01)	34	45.0	40.0	43.1
CL541-0629-6-01	DF1B-36DP-2.5DSA(01)	36	47.5	42.5	45.6
CL541-0631-8-01	DF1B-40DP-2.5DSA(01)	40	52.5	47.5	50.6

RECOMMENDED PATTERN (5 : 1)

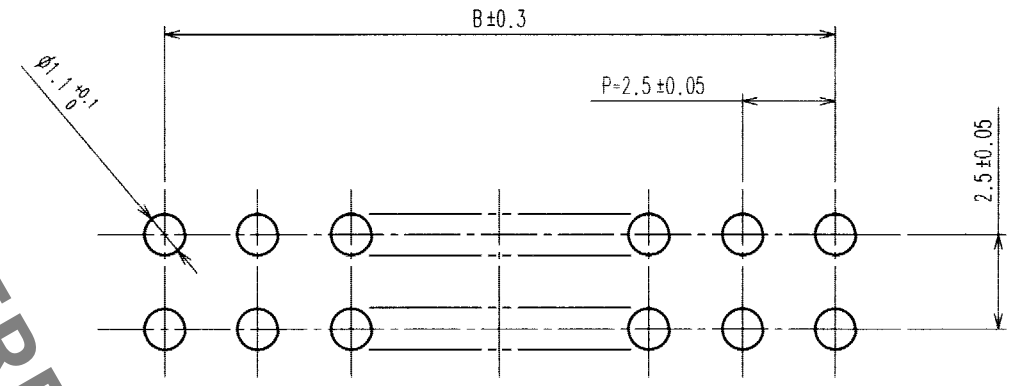

HRS DRAWING FOR REFERENCE

NO.	MATERIAL	FINISH, REMARKS	NO.	MATERIAL	FINISH, REMARKS
1	POLYAMIDE	NATURAL (WHITE), UL94V-0	2	BRASS	UNDER PLATING: NICKEL PLATED 1μm MIN OVERPLATING: GOLD PLATED 0.2μm MIN

CODE NO. (OLD)	DRAWN	DESIGNED	CHECKED	APPROVED	RELEASED
CL	M.KURAMASHI 03.03.13	T.Kumazawa 03.03.17	H.Umehara 03.03.17	K.Katayama '03.3.17	. .

SCALE 2 : 1	DRAWING NO. EDC3-071800-01	PART NO. DF1B-*DP-2.5DSA(01)
UNITS mm	HRS HIROSE ELECTRIC CO., LTD	CODE NO. CL541 1/1

TO

FORM NO.229