Apr.1.2026 Copyright 2026 HIROSE ELECTRIC CO., LTD. All Rights Reserved.
In case of consideration for using Automotive equipment / device which demand high reliability, kindly contact our sales window correspondents.

ELV, RoHS COMPLIANT

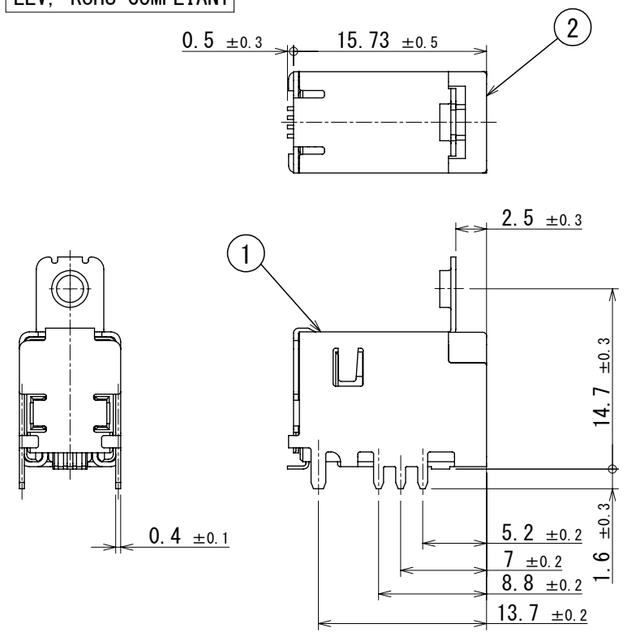

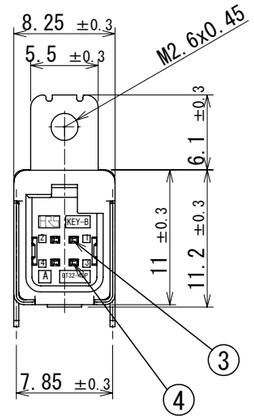

MATED CONNECTORS

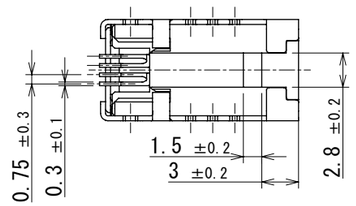

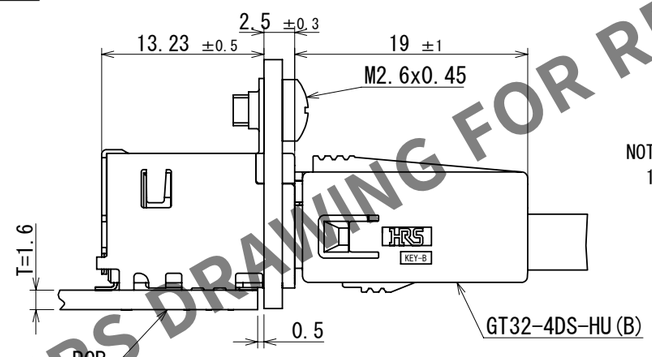

PACKING STYLE

7 TRAYS STACKING.
ODD NUMBER TRAYS AND EVEN NUMBER TRAYS ARE REVERSE DIRECTION.
TOP TRAY IS EMPTY.

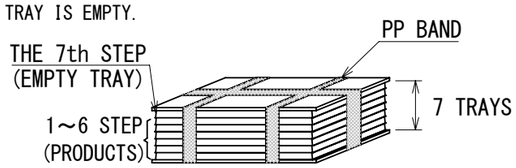

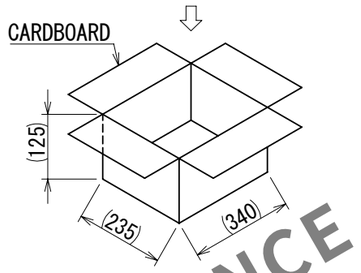

CARDBOARD : 540PCS

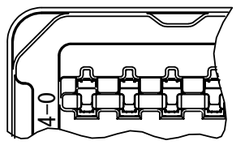

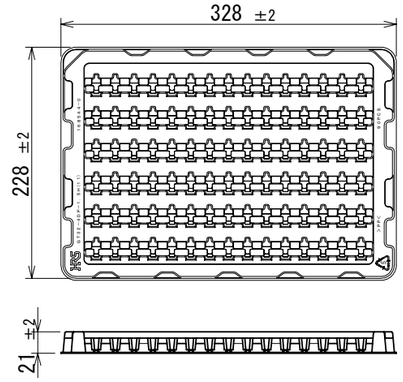

1TRAY : 90PCS

HRS DRAWING FOR REFERENCE

NOTES

1. RECOMMENDED REFLOW PROFILE (SEE RIGHT GRAPH)
   CYCLE TIME: UP TO 2 CYCLES OF REFLOW SOLDERING ARE POSSIBLE UNDER THE CONDITIONS, PROVIDED THAT THERE IS A RETURN TO NOMAL TEMPERATURE BETWEEN THE FIRST AND SECOND CYCLE.
   PEAK TEMPERATURE: 250℃
   230℃ MIN, FOR 20 TO 40 SECONDS.
   PREHEATING AREA 150～180℃ FOR 60 TO 120 SECONDS.
2. HAND SOLDERING: 280～300℃, 2SECONDS MAX.
3. CONTACT COPLANARITY: 0.1mm MAX.
4. RECOMMENDED THICKNESS OF PCB: 1.6mm
5. RECOMMENDED THICKNESS OF SOLDERING PASTE: 0.12mm

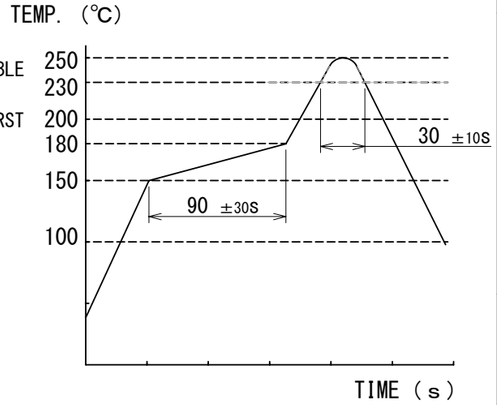

RECOMMENDED PCB LAYOUT
(3:1)

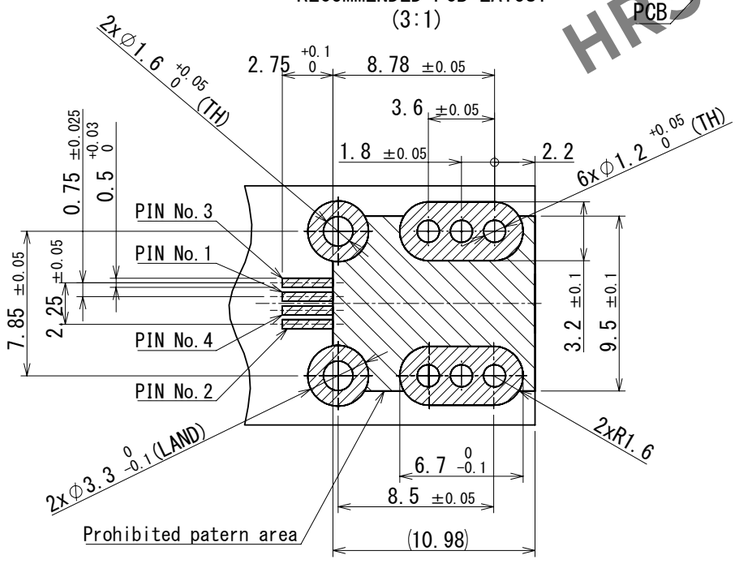

RECOMMENDED PANEL CUTOUT

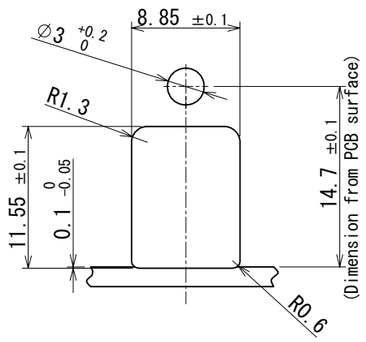

NO.	MATERIAL	FINISH , REMARKS	NO.	MATERIAL	FINISH , REMARKS
2	PA	GREEN	4	BRASS	TIN PLATING
1	COPPER ALLOY	TIN PLATING	3	BRASS	TIN PLATING

UNITS	SCALE	COUNT	DESCRIPTION OF REVISIONS	DESIGNED	CHECKED	DATE
mm	2:1	0	DIS-T-00018432	KN.YANAGIMOTO	EJ.WAKATSUKI	2023.06.19

HIROSE ELECTRIC CO., LTD.

APPROVED	: AR.SHIRAI	2017.05.31	DRAWING NO.	EDC-361828-30-01
CHECKED	: TH.MIZUGUCHI	2017.05.30	PART NO.	GT32-4DP-1.5H(B)(30)
DESIGNED	: TS.KUBOTA	2017.05.30		
DRAWN	: TS.KUBOTA	2017.05.30	CODE NO.	CL0782-0062-6-30

1/1

FORM HC0011-5