1. Scope
This is document provides instruction for wiring HR30 overmold type connector.

2. Procedure step

No.	Harness procedure

1

Strip the cable jacket.

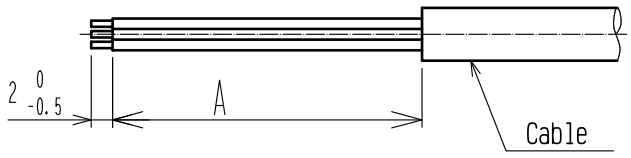

table 1

	A
Solder type:3 and 6 pos.	20mm max
Solder type:12 pos.	25mm max
Crimp type:10 and 12 pos.	30~35mm

2

Insert the spacer to the cable.

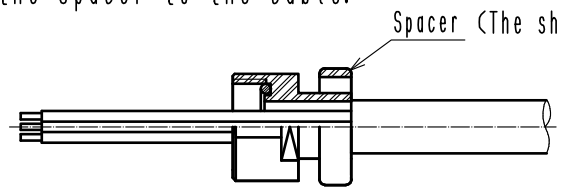

3

△1◆Solder type
Insert the P-Housing, R-Housing, J-Housing in the applicable solder termination fixture.
Solder the wires to the contacts of the P-Housing, R-Housing, J-Housing.
For details on the soldering , see HR30 Plug connector Harness Assembly Instructions (ATAD-C0509-00)and HR30 Jack connector Harness Assemmbly Instructions (ATAD-C0476-00).

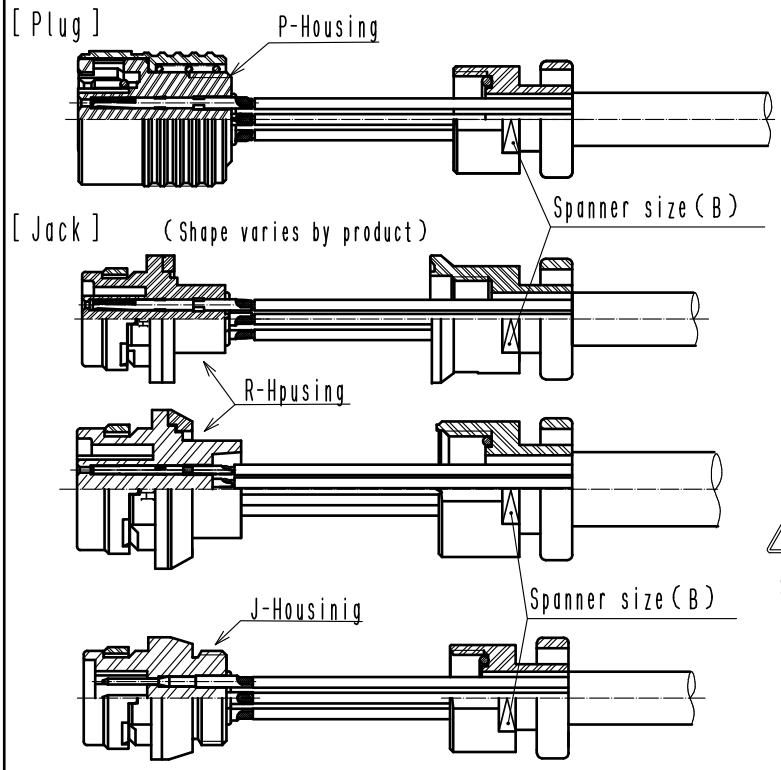

Spanner size

	(B)
6 size	8
7,8 size	11

Soldering conditions
Soldering iron tip temperature
:350±10℃
Soldering time:3seconds min.

⚠Caution
Solder connection conditions must be strictly observed.
Failure to observe them may result in the melting of insulators or the loss of terminals.

	COUNT	DESCRIPTION OF REVISIONS	DESIGNED	CHECKED	DATE
△1	7	DIS-C-00014992	HY. KISHI	HY. KOBAYASHI	20230404

名 称 TITLE

Assembly procedure for HR30 overmold type connectors.

HRS ヒロセ電機株式会社 HIROSE ELECTRIC CO., LTD.

APPROVED	MO. SATOH	20090827
CHECKED	HY. KISHI	20090827
CHARGED	TY. SUZUKI	20090827
WRITTEN	TY. SUZUKI	20090827

技 術 指 定 書 TECHNICAL SPECIFICATION

ETAD-C0198-00 △1 1/4

FORM 213-1

Apr.1.2024 Copyright 2024 HIROSE ELECTRIC CO., LTD. All Rights Reserved.

Apr.1.2024 Copyright 2024 HIROSE ELECTRIC CO., LTD. All Rights Reserved.

⚠1【Cover the soldered connection with a shrinking tube】

The heating range when processing the shrink tube at the connection portion after soldering is shown in the figure. Please note that the following may occur if the product is heated beyond the heating range.

①The product melts.

②The C ring is deformed and does not lock when mated.

In order to prevent deformation of the C ring as described in ①, please heat after mating the compatible plug and receptacle.

[Plug]

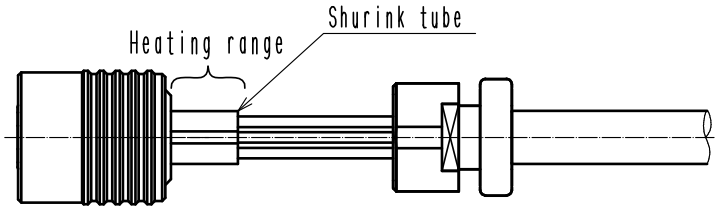

[Jack]

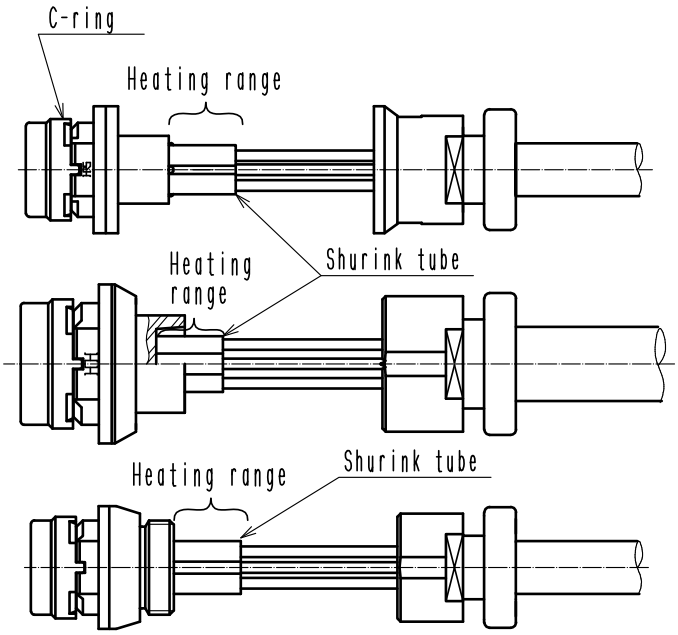

Assembly phase diagram

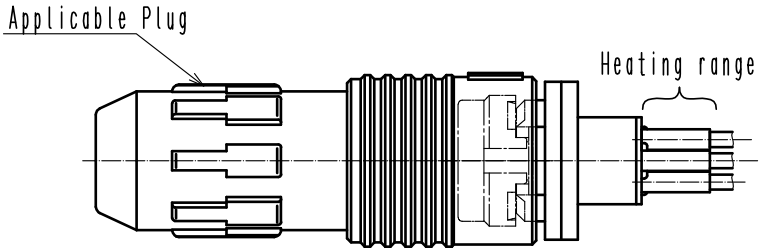

No.	Harness Procedure

4

⚠1 ◆Crimp type

Insert the crimped insulation wires into the terminal.(Crimp type)
Note)C/H shown in table3.
For details on the soldering , see HR30 Plug connector Harness Assembly Instructions (ATAD-C0509-00)and HR30 Jack connector Harness Assemmbly Instructions (ATAD-C0476-00).

[Plug]

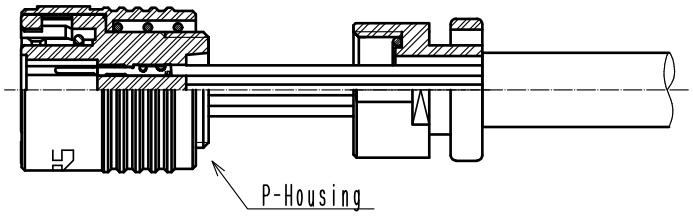

[Jack]

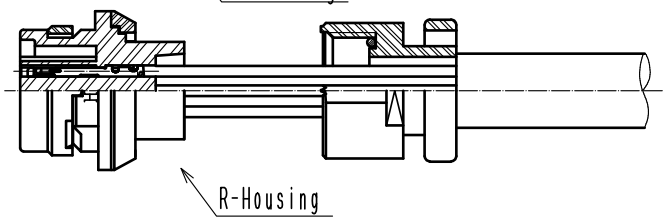

⚠Caution When inserting the terminals make sure not to deform them.
Deformed terminals may cause poor contact or disconnection.

table 3

AWG SIZE	Contact wire crimp height(mm)	Covering crimp height(mm)
UL1571 Stranded wire AWG26	0.52 ~ 0.58	0.85 ~ 1.00
UL1571 Stranded wire AWG28	0.48 ~ 0.54	0.85 ~ 1.00
UL1571 Stranded wire AWG 30	0.46 ~ 0.52	0.80 ~ 0.95

5

⚠1 Potting silicone into P-Housing and R-housing.

[Plug]

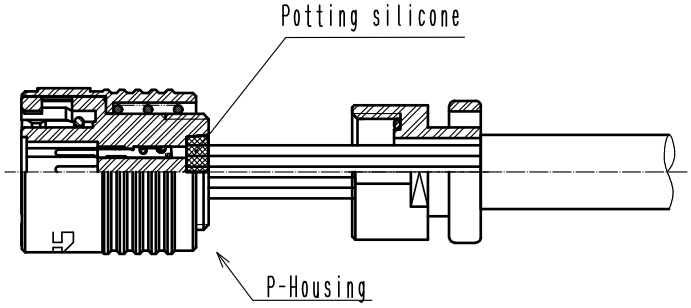

[Jack]

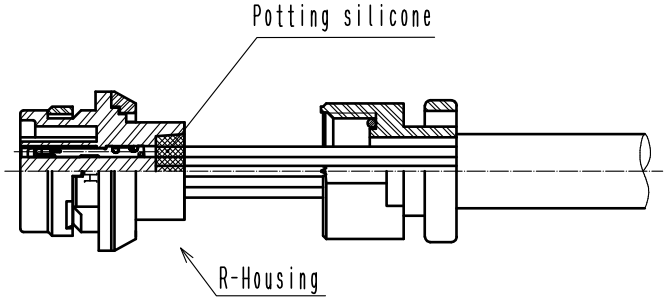

Apr.1.2024 Copyright 2024 HIROSE ELECTRIC CO., LTD. All Rights Reserved.

No.	Harness Procedure

6

△1◆Solder type, Crimp type Common

Assemble Spacer to the P-Housing, R-Housing, J-Housing.

(The recommended clamp toorque of spacer to be 0.45～0.5N・m.
To prevent loosening, please apply Loctite 263 and LocPrimer 7649 made by Henkel Japan based on technial Specification ATAD-C0151-00 (HR30 Loctite application method).)

[Plug]

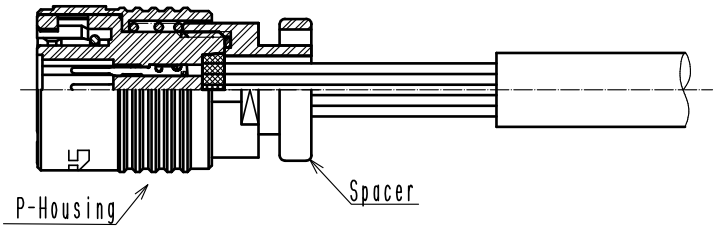

[Jack]

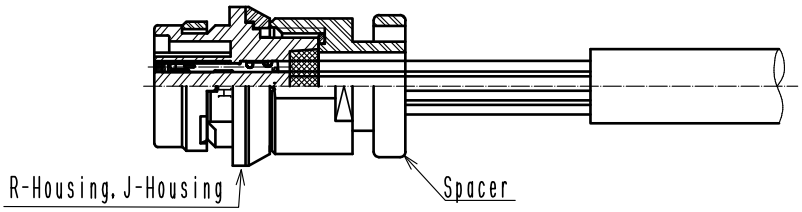

7

△1 Overmolding

[Plug]

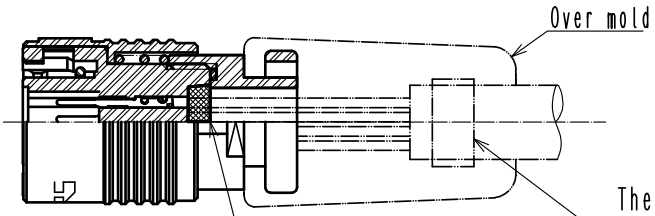

Please start overmolding after silicones has congealed.

The use of the clamp ftting is recommended.

[Jack]

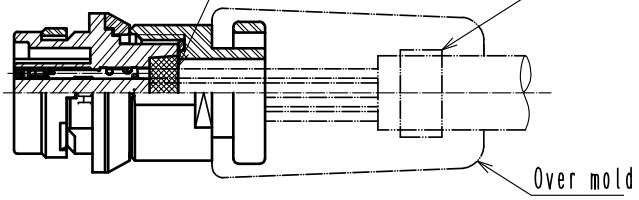

8

△1After overmolding

Please check whether silicone and overmold has exceeded to edge of contact hole which is mating point side. Here is sample which may caused electric problem.

[Plug]

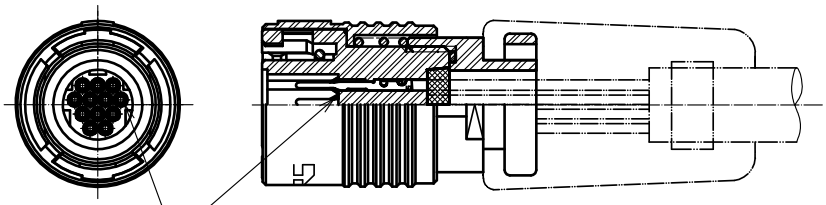

Silicone and overmold

Even if one of exceed of overmold or silicone, it may cause electric problem.

[Jack]

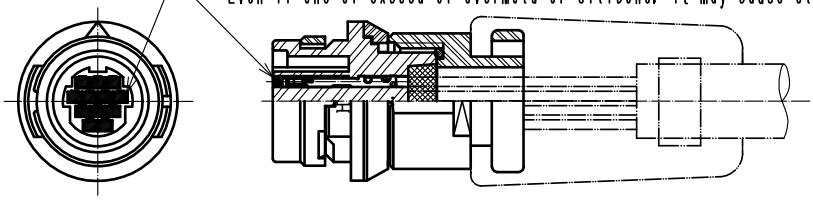

FORM 213-2

Apr.1.2024 Copyright 2024 HIROSE ELECTRIC CO., LTD. All Rights Reserved.