Apr.1.2024 Copyright 2024 HIROSE ELECTRIC CO., LTD. All Rights Reserved.
In case of consideration for using Automotive equipment / device which demand high reliability, kindly contact our sales window correspondents.

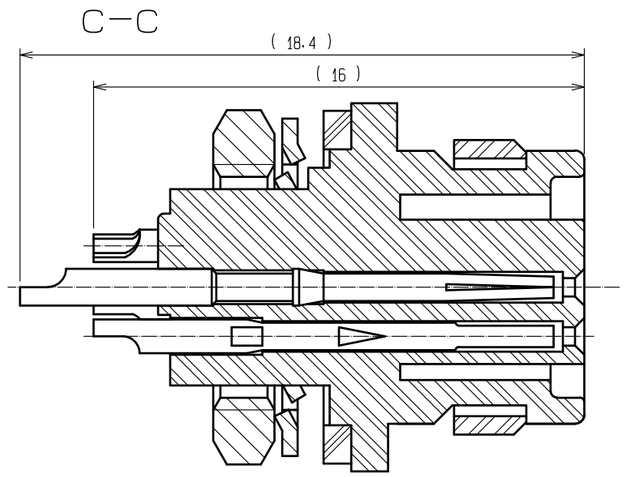

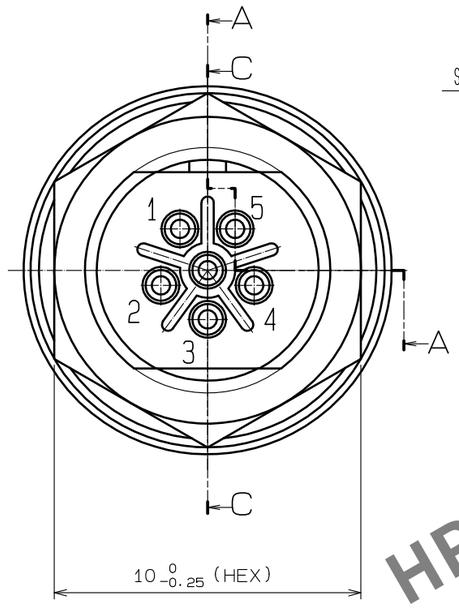

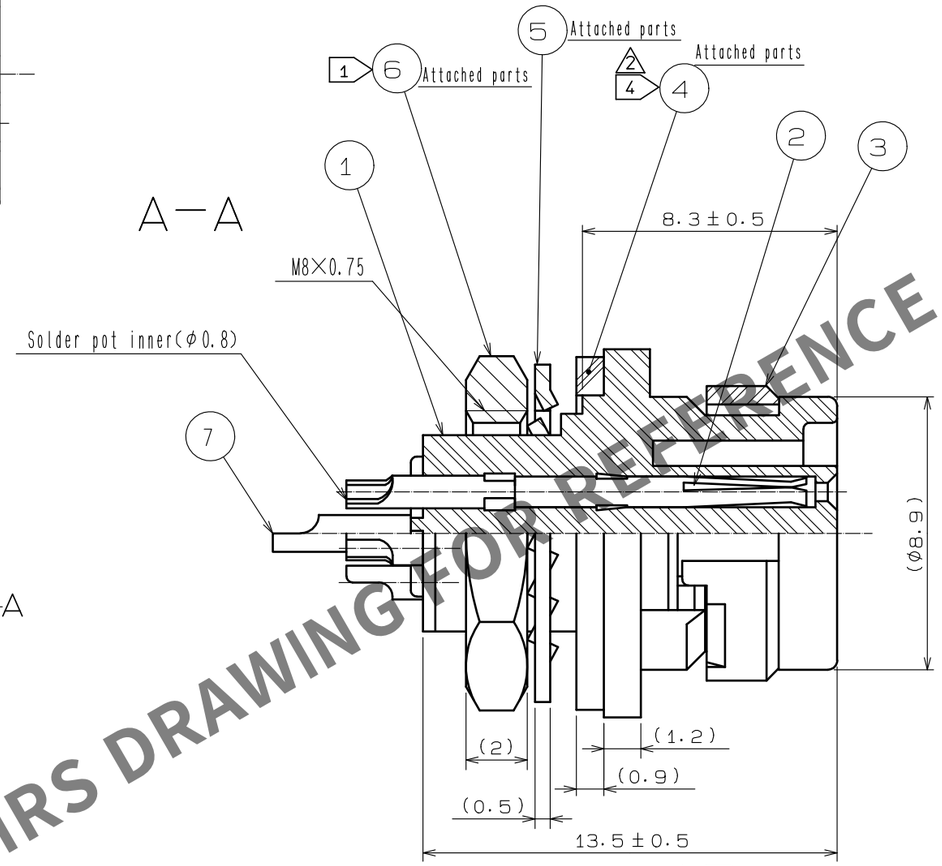

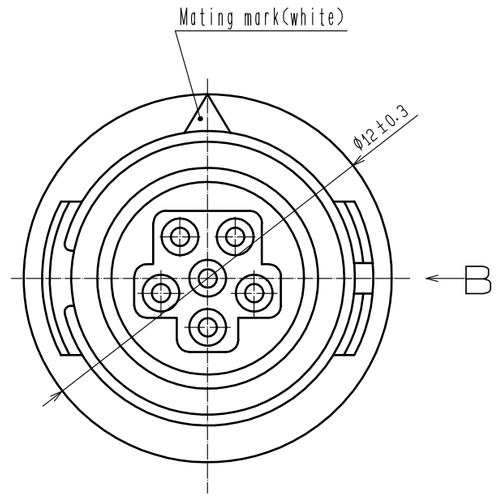

HRS DRAWING FOR REFERENCE

Notes 2 1 The recommended clump torque of Ref. No. ⑥ to be 0.5N・m.
LOCTITE 263, LOCPRIMER 7649, ROCTITE JAPAN is recommended to prevent Ref. No. ⑥ from loosening.
2 Table for soldering is available HR30-6R-6S-T01.
3 Surface plating:gold plating 0.2μm min.
Under plating:nickel plating 2μm min.
2 4 When this connector is mounted on to panel, be careful Ref. No. ④ is assembled surely Ref. No. ① as shown in this figure to keep waterproof effectiveness.
2 5 The assembly of this product applies to the manual ETAD-C0302-00.

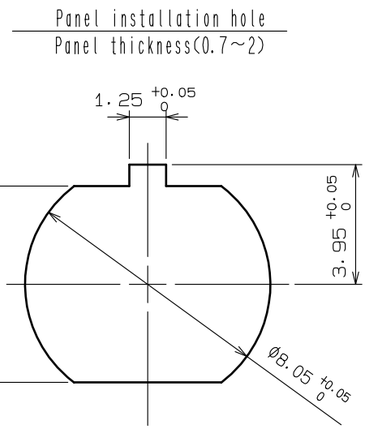

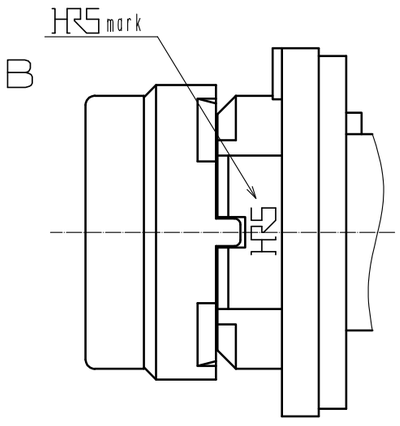

NO.	MATERIAL	FINISH , REMARKS	NO.	MATERIAL	FINISH , REMARKS
4	CR	(Black)			
3	PPS	(Black) UL94V-0	7	Beryllium copper	3
2	Bronze alloy	3	6	Brass	Nickel plating
1	PPS	(Black) UL94V-0	5	Phosphor bronze	Nickel plating

UNITS	SCALE		COUNT	DESCRIPTION OF REVISIONS	DESIGNED	CHECKED	DATE
mm	5 : 1	2	4	DIS-C-00014886	HY. KISHI	HY. KOBAYASHI	20230328

HIROSE ELECTRIC CO., LTD.

APPROVED	: MR. YOSHIDA	20050105	DRAWING NO.	EDC3-112022-71
CHECKED	: MO. SATOH	20050105	PART NO.	HR30-6R-6S(71)
DESIGNED	: YH. YAMADA	20050105	CODE NO.	CL0130-1008-8-71
DRAWN	: YH. YAMADA	20050105		2 1/1

FORM HC0011-5-7