May.1.2024 Copyright 2024 HIROSE ELECTRIC CO., LTD. All Rights Reserved.
In case of consideration for using Automotive equipment / device which demand high reliability, kindly contact our sales window correspondents.

	COUNT	DESCRIPTION OF REVISIONS	BY	CHKD	DATE		COUNT	DESCRIPTION OF REVISIONS	BY	CHKD	DATE
1	2	DIS-C-000633	H.Z	K.E	07.05.28						. .
					. .						. .
					. .						. .

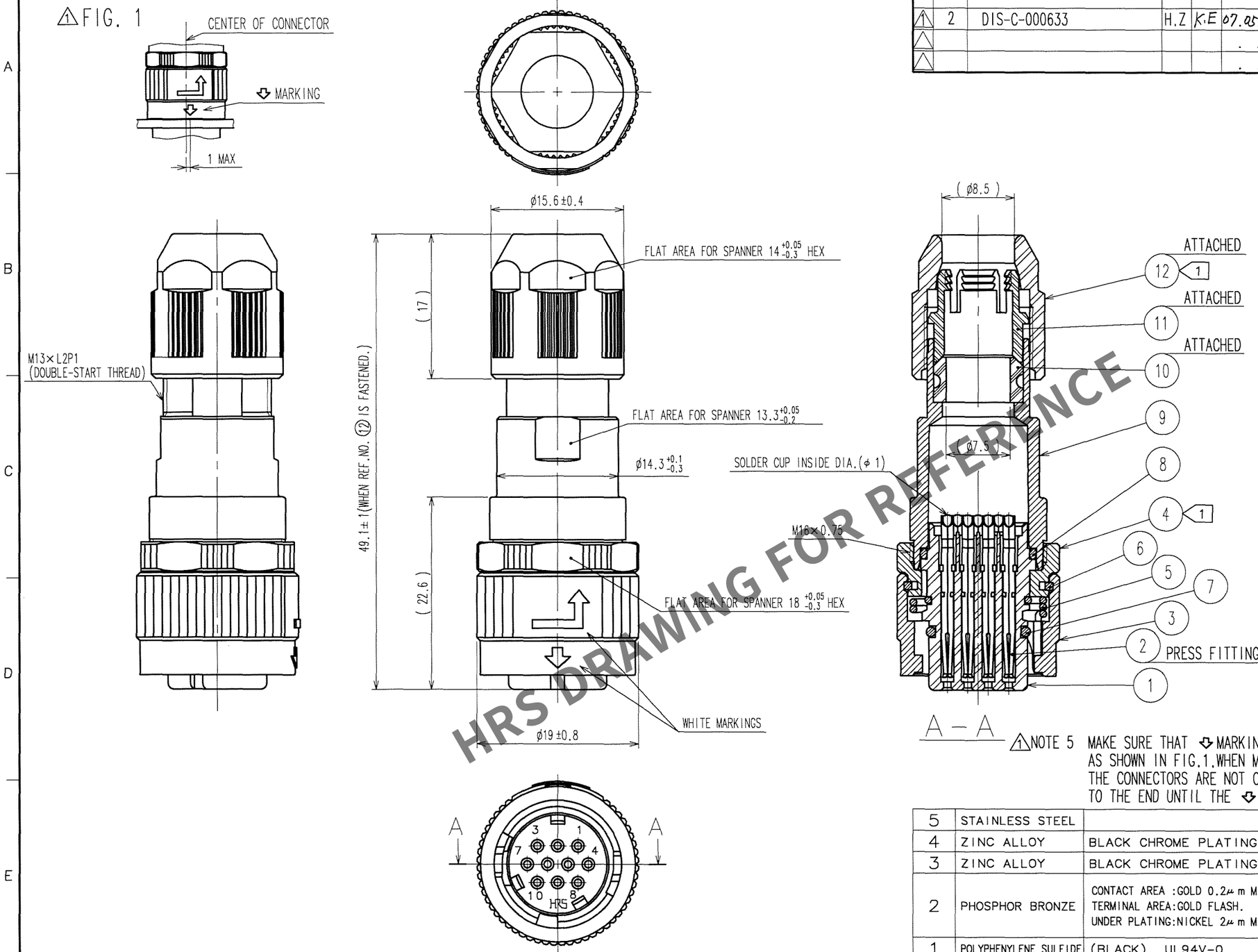

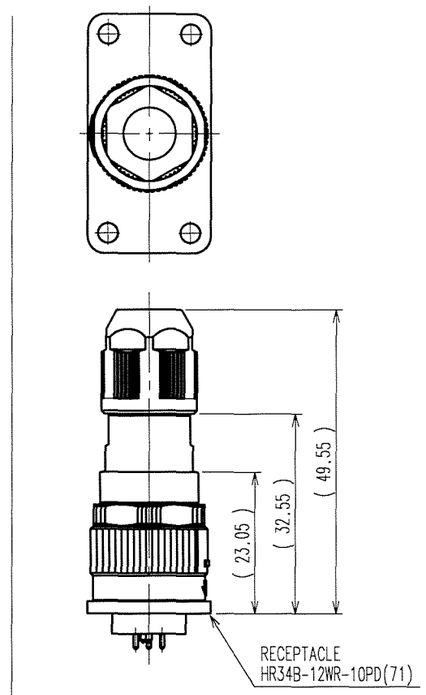

MATING CONDITION (1:1)
(WHEN REF.NO. 12 IS FASTENED)

1 NOTE 5 MAKE SURE THAT MARKING IS POSITIONED WITHIN 1 FROM THE CENTER OF CONNECTOR AS SHOWN IN FIG.1.WHEN MATED TO THE APPLICABLE RECEPTACLE,OTHERWISE, THE CONNECTORS ARE NOT COMPLETELY MATED,AND INSERT THIS PLUG TO THE RECEPTACLE TO THE END UNTIL THE MARKING IS LOCATED IN THE CENTER OF THE CONNECTOR.

NO.	MATERIAL	FINISH, REMARKS	NO.	MATERIAL	FINISH, REMARKS
5	STAINLESS STEEL		12	POLYPHENYLENE SULFIDE	(BLACK) UL94V-0
4	ZINC ALLOY	BLACK CHROME PLATING	11	POLYAMIDE	(WHITE) UL94V-0
3	ZINC ALLOY	BLACK CHROME PLATING	10	HYDROGENATION ACRYLONITRILE BUTADIENE RUBBER	(GRAY)
2	PHOSPHOR BRONZE	CONTACT AREA :GOLD 0.2μm MIN. TERMINAL AREA:GOLD FLASH. UNDER PLATING:NICKEL 2μm MIN.	9	ALUMINIUM ALLOY	BLACK CHROMATE TREATMENT (TRIVALENT CHROMIUM)
			8	FLUORO RUBBER	(BLACK)
			7	FLUORO RUBBER	(BLACK)
1	POLYPHENYLENE SULFIDE	(BLACK) UL94V-0	6	PHOSPHOR BRONZE	NICKEL PLATING

NOTES 1 THE RECOMMENDED TIGHTENING TORQUE, ADHESIVE AND PRIMER FOR M16×0.75 PORTION OF REF NO.④ AND ⑨ AND M13×L2P1 PORTION OF REF NO.⑨ AND ⑫ ARE AS FOLLOWINGS. THE ADHESIVE AND PRIMER SHOULD BE ATTACHED ON THE MALE SCREW PORTION OF REF NO.⑨ .
TIGHTENING TORQUE: 0.9 TO 1 N·m.
ADHESIVE: LOCTITE 242 MADE BY HENKEL JAPAN LTD.
PRIMER: LOCK PRIMER 7649, MADE BY HENKEL JAPAN LTD.(ONLY M13×L2P1)
2 ROTATION EXAMPLES ARE SHOWN FOR REF.NO.①,④,⑨, AND ⑫.
3 THE RECOMMENDED CABLE:UL20276-SB(FLEX)5×20AWG+1P×25AWG MADE BY HITACHI CABLE LTD.
4 CONDUIT IS NOT APPLICABLE TO THIS CONNECTOR.

CODE NO.(OLD)	DRAWN	DESIGNED	CHECKED	APPROVED	RELEASED
CL	M.SATO 07.04.03	H.ZENBA 07.04.03	K.EZAWA 07.04.03	M.SATO 07.04.03	. .

SCALE 2 : 1
UNITS mm
DRAWING NO. EDC3-114269-71
HRS HIROSE ELECTRIC CO., LTD
PART NO. HR34B-12WPB-10S(71)
CODE NO. CL134-0007-5-71
1/1

TO
R

HRS DRAWING FOR REFERENCE