May.1.2024 Copyright 2024 HIROSE ELECTRIC CO., LTD. All Rights Reserved.
In case of consideration for using Automotive equipment / device which demand high reliability, kindly contact our sales window correspondents.

	COUNT	DESCRIPTION OF REVISIONS	BY	CHKD	DATE		COUNT	DESCRIPTION OF REVISIONS	BY	CHKD	DATE
1	1	DIS-C-000354	H.Z	K.E	06.09.11	△					. .
2	1	DIS-C-000368	H.N	K.E	06.10.04	△					. .
3	2	DIS-C-000633	H.Z	K.E	07.05.25	△					. .

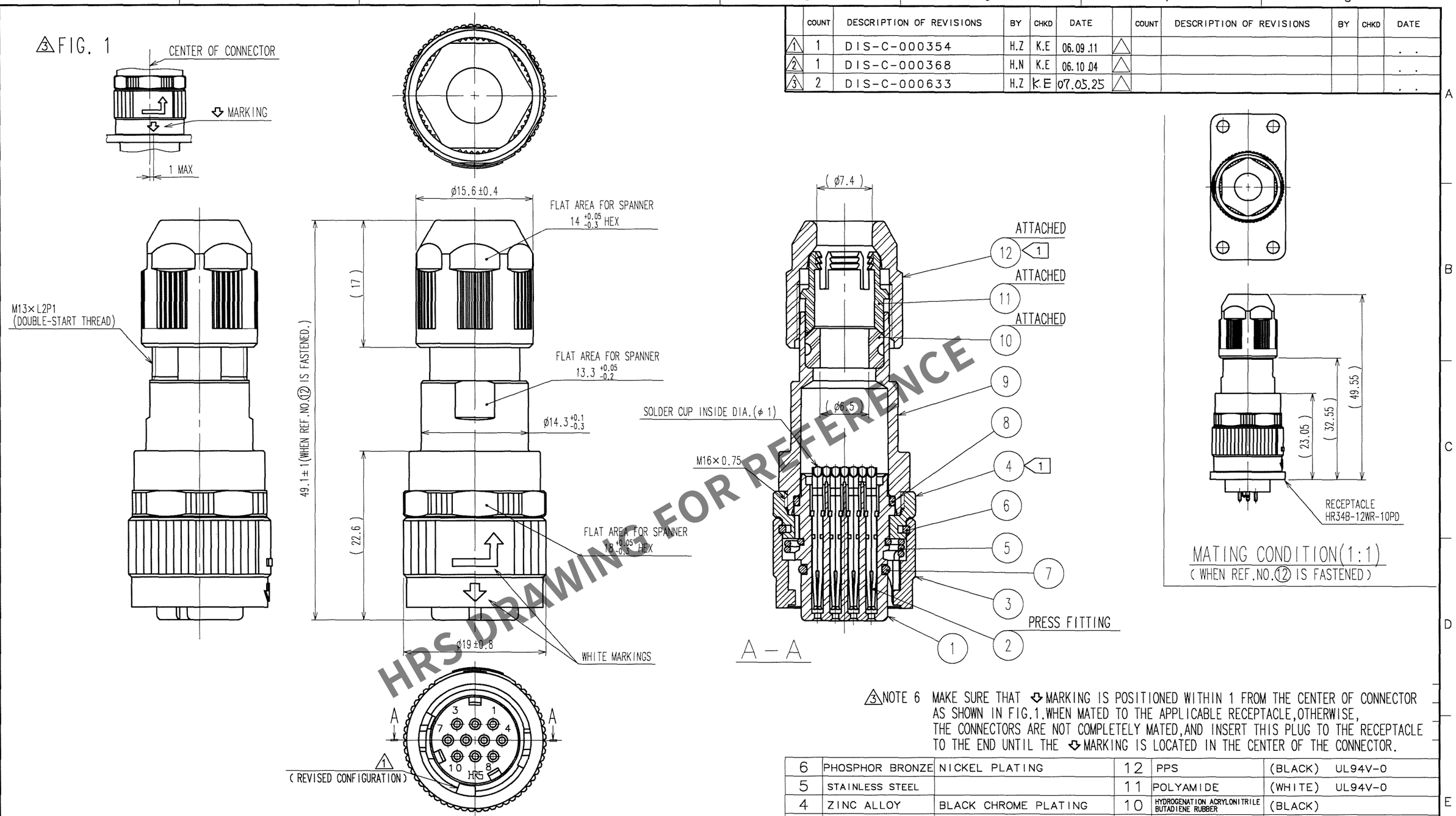

HRS DRAWING FOR REFERENCE

3 NOTE 6 MAKE SURE THAT MARKING IS POSITIONED WITHIN 1 FROM THE CENTER OF CONNECTOR AS SHOWN IN FIG.1.WHEN MATED TO THE APPLICABLE RECEPTACLE,OTHERWISE, THE CONNECTORS ARE NOT COMPLETELY MATED,AND INSERT THIS PLUG TO THE RECEPTACLE TO THE END UNTIL THE MARKING IS LOCATED IN THE CENTER OF THE CONNECTOR.

NO.	MATERIAL	FINISH, REMARKS	NO.	MATERIAL	FINISH, REMARKS
6	PHOSPHOR BRONZE	NICKEL PLATING	12	PPS	(BLACK) UL94V-0
5	STAINLESS STEEL		11	POLYAMIDE	(WHITE) UL94V-0
4	ZINC ALLOY	BLACK CHROME PLATING	10	HYDROGENATION ACRYLONITRILE BUTADIENE RUBBER	(BLACK)
3	ZINC ALLOY	BLACK CHROME PLATING	9	POLYAMIDE	(BLACK) UL94V-0
2	PHOSPHOR BRONZE	2	8	FLUORO RUBBER	(BLACK)
1	PPS	(BLACK) UL94V-0	7	FLUORO RUBBER	(BLACK)

NOTES 1 THE RECOMMENDED TIGHTENING TORQUE, ADHESIVE AND PRIMER FOR M16×0.75 PORTION OF REF NO.4 AND 9 AND M13×L2P1 PORTION OF REF NO.9 AND 12 ARE AS FOLLOWINGS. THE ADHESIVE AND PRIMER SHOULD BE ATTACHED ON THE MALE SCREW PORTION OF REF NO.9 .
TIGHTENING TORQUE: 0.9 TO 1 N·m.
ADHESIVE: LOCTITE 242 MADE BY HENKEL JAPAN LTD.
PRIMER: LOCK PRIMER 7649, MADE BY HENKEL JAPAN LTD.
2 CONTACT AREA : GOLD 0.2μm min.
SOLDER AREA : GOLD FLASH
UNDER PLATING : NICKEL 2μm min.
3 CABLE CLAMP STRENGTH AND WATERPROOF PERFORMANCE DEPEND ON CABLE STRUCTURE SUCH AS THE JACKET MATERIAL AND HARDNESS. WE RECOMMEND CHECKING THE PERFORMANCE BEFORE THE USAGE.
2 4 CONDUIT IS NOT APPLICABLE TO THIS CONNECTOR.
5 ROTATION EXAMPLES ARE SHOWN FOR REF. NO.1,4,9 AND 12 .

TO
R

CODE NO.(OLD)	DRAWN	DESIGNED	CHECKED	APPROVED	RELEASED
CL	H.ZENBA 06.07.14	H.ZENBA 06.07.14	K.EZAWA 06.07.14	M.SATO 06.07.14	. .

SCALE 2 : 1
UNITS mm
DRAWING NO. EDC3-115190
HRS HIROSE ELECTRIC CO., LTD
PART NO. HR34B-12WPD-10S
CODE NO. CL134-0026-0
1/1
FORM NO.229