Mar.1.2026 Copyright 2026 HIROSE ELECTRIC CO., LTD. All Rights Reserved.
In case of consideration for using Automotive equipment / device which demand high reliability, kindly contact our sales window correspondents.

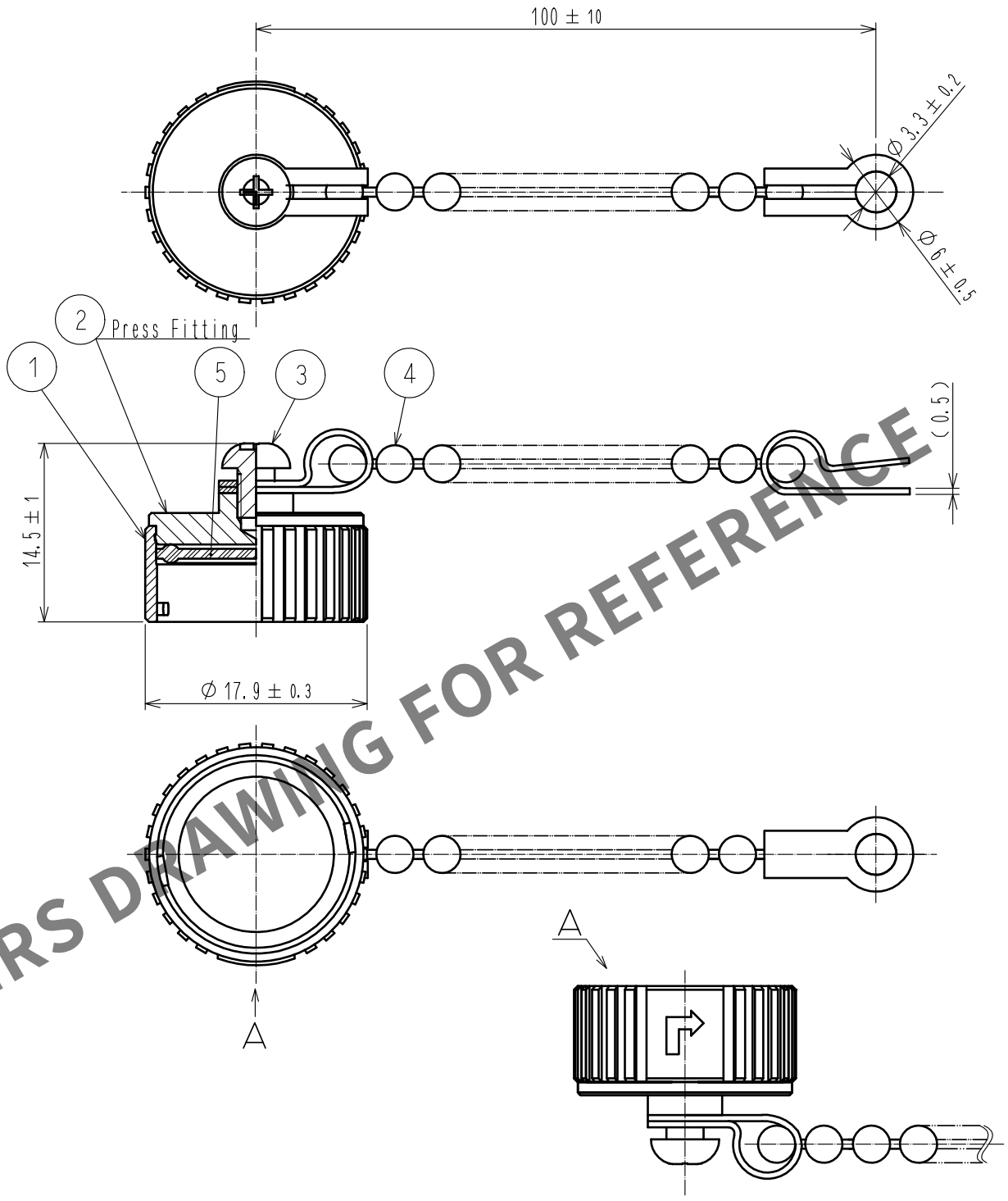

HRS DRAWING FOR REFERENCE

NOTE 1 This product is a cap for LF13WBR※-※(※).
It is applicable regardless of given alphabets or numbers shown at ※.

NO.	MATERIAL	FINISH . REMARKS	NO.	MATERIAL	FINISH . REMARKS
3	Copper	Znic plating			
2	Brass	Nickel plating	5	Silicone rubber	(Black)
1	Zinc alloy	Nickel plating	4	Stainless	

UNITS mm	SCALE 2 : 1	COUNT	DESCRIPTION OF REVISIONS	DESIGNED	CHECKED	DATE
		0				

HIROSE ELECTRIC CO., LTD.

APPROVED	: EJ. KUNII	20220301	DRAWING NO.	EDC-117593-00-00
CHECKED	: EJ. KUNII	20220301	PART NO.	LF13WBR-C1
DESIGNED	: TR. YAMANOUE	20220228	CODE NO.	CL0136-3006-1-00
DRAWN	: TR. YAMANOUE	20220228		0 1/1

FORM HC0011-5-51