Apr.1.2024 Copyright 2024 HIROSE ELECTRIC CO., LTD. All Rights Reserved.

1. APPLICATION

THIS DOCUMENT DEFINES CABLE ASSEMBLY METHOD FOR TM21P-88P.
THIS CABLE ASSEMBLY METHOD IS FOR HIROSE APPROVED CABLE.

MANUFACTURE	OKI ELECTRIC CABLE CO LTD
PRODUCT NAME	0.5 4P F-DTI-CT(SLA)
CONDUCTOR SIZE	Ø0.5mm SOLID WIRE
INSULATION DIAMETER	Ø1mm
GROUND WIRE	AWG#26 (TIN COAT WIRE)
OUTER JACKET DIAMETER	Ø6.5mm

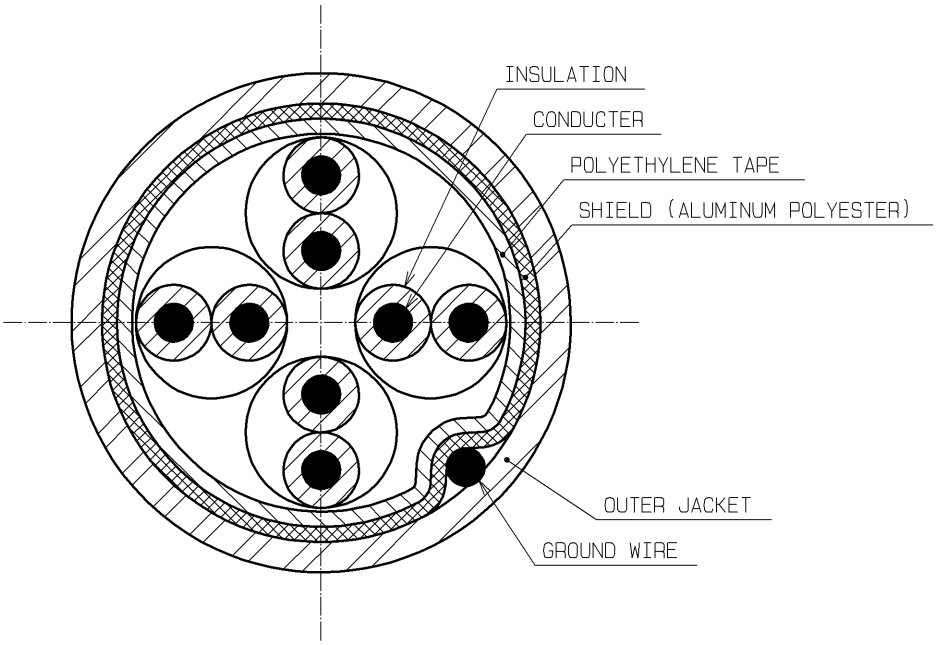

2. PLUG WIRING TOOL △3

	TOOL NAME	TOOL CL NO.
HAND TOOL	HT601/TM21P-88P	CL902-2133-1

	COUNT	DESCRIPTION OF REVISIONS	DESIGNED	CHECKED	DATE
△3	1	DIS-E-003531	YH. MAMADA	YH. ENAMI	10.12.21

名 称 TITLE

TM21P-88P CABLING MANNUAL

HRS ヒロセ電機株式会社 HIROSE ELECTRIC CO., LTD.

APPROVED	HO. MIWA	05.01.05
CHECKED	YH. ENAMI	05.01.05
CHARGED	TU. TANIGUCHI	05.01.05
WRITTEN	TU. TANIGUCHI	05.01.05

技 術 指 定 書 TECHNICAL SPECIFICATION

ETAD-E2349 △3

FORM 213-1

3. CABLE ASSEMBLY METHOD

PROCEDURE	WORK CONTENTS
1. CABLE END TREATMENT	1-1. STRIP OF OUTER JACKET STRIP OUTER JACKET NOT TO CRACK INSULATION CONDUCTOR. 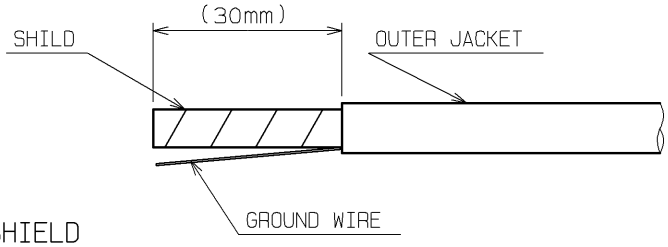 1-2. CUT OF SHIELD CUT SHIELD BY EDGE OF OUTER JACKET. 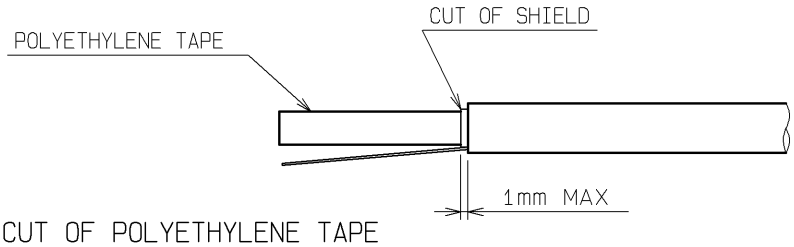 1-3. CUT OF POLYETHYLENE TAPE CUT POLYETHYLENE TAPE BY EDGE OF OUTER JACKET. 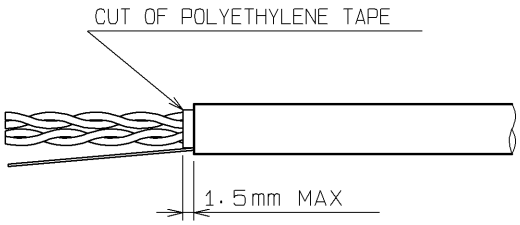
2. CORE CABLE FORMING	2-1. DRESS STRAIGHT OF TWISTED PAIR CABLE CORE CABLE TO BE DRESSED STRAIGHT WITH NO BUDGE TO END OF OUTER JACKET. GROUND WIRE MUST BE FOLDED AS SHOWN. 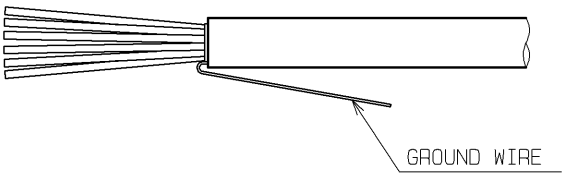 2-2. SPRED CORE CABLE SPREAD CORE CABLE ACCORDING TO CONNECTOR PIN ASSIGNMENT. 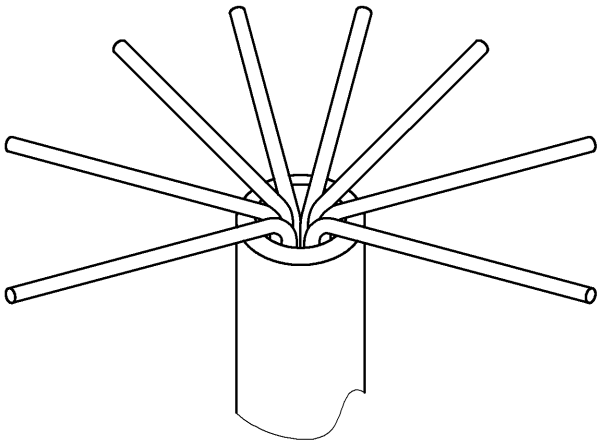

Apr.1.2024 Copyright 2024 HIROSE ELECTRIC CO., LTD. All Rights Reserved.

PROCEDURE	WORK CONTENTS
3. CABLE ARRANGEMENT	3-1. ARRANGEMENT OF CORE CABLE ARRANGE CORE CABLE ACCORDING TO CONNECTOR PIN ASSIGNMENT. 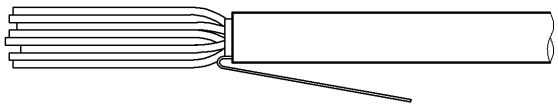 3-2. DRESS ALL EXCESS CORE CABLE (1) DRESS ALL EXCESS CORE CABLE. EASY INSTALL GUIDE PLATE. 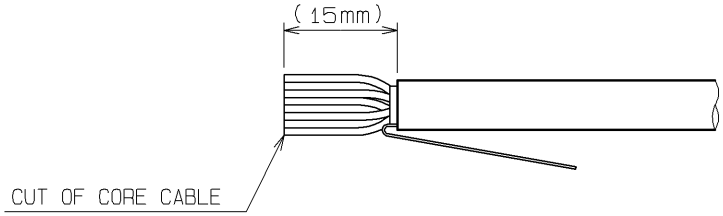 3-3. INSTALL GUIDE PLATE INSTALL GUIDE PLATE WITH A CLEARANCE OF 3~5mm FROM THE END OF OUTER JACKET. SHOULD BE NO DEFORMATION OF GUIDE PLATE. 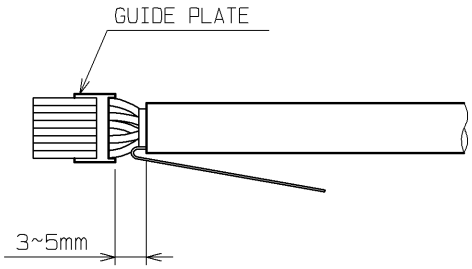 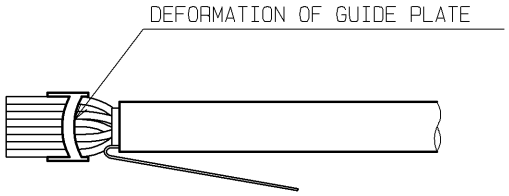
4. CABLE AND TREATMENT (2)	4-1. STRIP OUTER JACKET STRIP OUTER JACKET WITH A CLEARANCE OF 14± 1mm FROM GUIDE PLATE. REMAIN SHIELD. 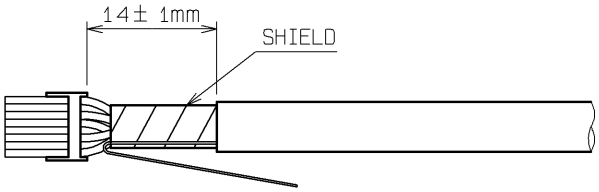

Apr.1.2024 Copyright 2024 HIROSE ELECTRIC CO., LTD. All Rights Reserved.

PROCEDURE	WORK CONTENTS

4-2. COIL COPPER TAPE (1)

COIL COPPER TAPE (12.7mm WIDTH) ONE TURN.

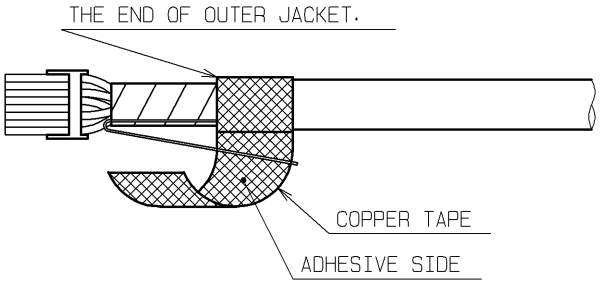

4-3. FORMING OF GROUND WIRE

DRESS GROUND WIRE IS SHOWN.
CUT EXCESS GROUND WIRE FROM COPPER TAPE.

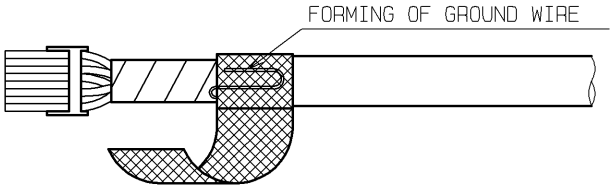

4-4. COIL COPPER TAPE (2)

COIL THE REMAIN OF COPPER TAPE.

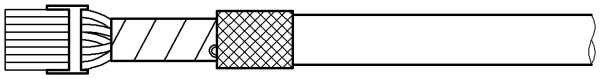

4-5. THE LENGTH OF COPPER TAPE

DIAMETER OF COPPER TAPE PORTION SHOULD BE ABOUT 6.8mm.
EXCEPT GROUND WIRE AREA.
(REF :L=32mm LENGTH FOR DIAMETER 6.5mm CABLE)

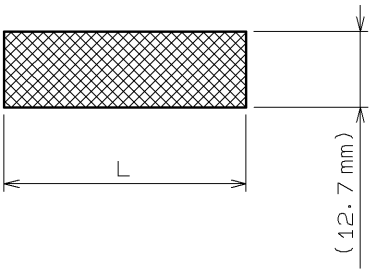

4-6. DRESS ALL EXCESS CORE CABLE (2)

DRESS ALL EXCESS CORE CABLE WITH A CLEARANCE OF 0.5mm
FROM TIP TO GUIDE PLATE.

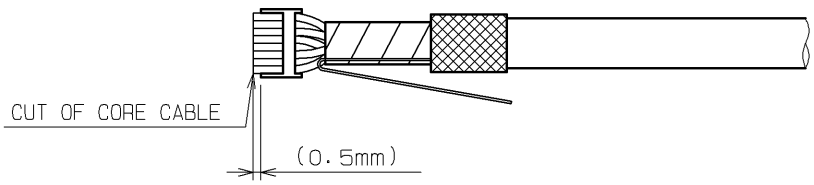

Apr.1.2024 Copyright 2024 HIROSE ELECTRIC CO., LTD. All Rights Reserved.

PROCEDURE	WORK CONTENTS
5. INSTALL GUIDE PLATE INTO PLUG BODY	INSTALL GUIDE PLATE AS SHOWN SO THAT GUIDE PLATE DOES NOT CONTACT CLUMP PORTION. PUSH GUIDE PLATE INTO BOTTOM SURFACE OF PLUG BODY. 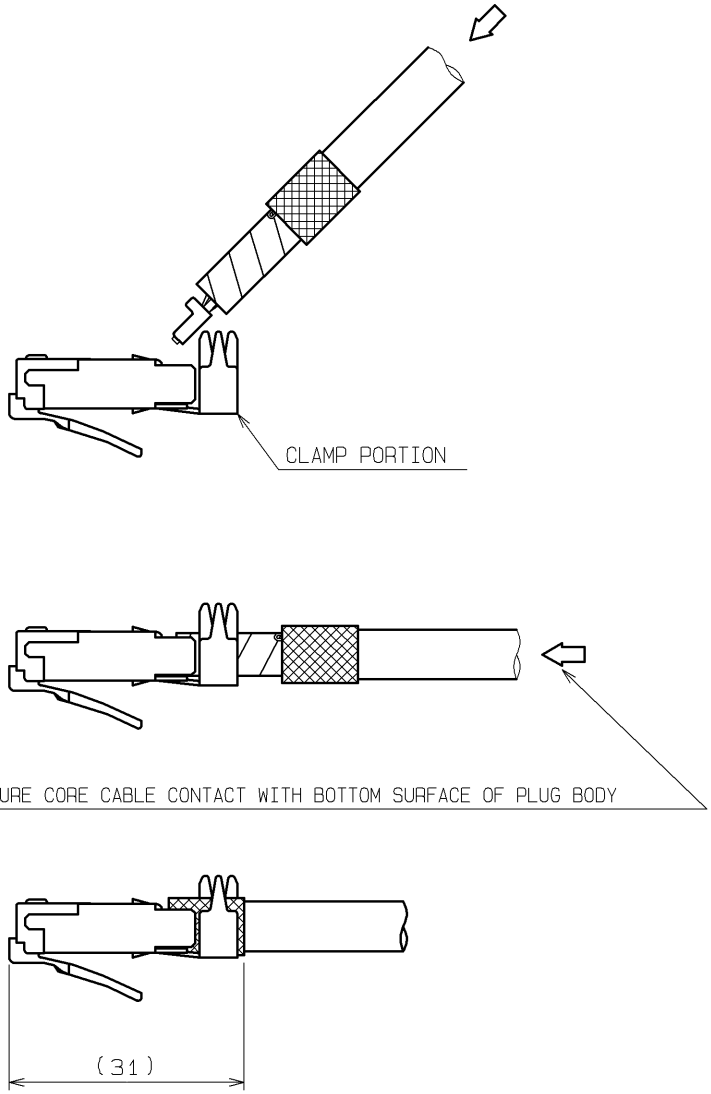

Apr.1.2024 Copyright 2024 HIROSE ELECTRIC CO., LTD. All Rights Reserved.

PROCEDURE	WORK CONTENTS
6. IDC TERMINATION	6-1. CAUTION OF IDC TERMINAION CHECK IF CORE CABLE CONTACT WITH BOTTOM SURFACE OF PLUG BODY AND ASSEMBLY BY HIROSE IDC TOOLING. WHEN ASSEMBLY, PUSH CABLE TIGHT AS SHOWN. △2 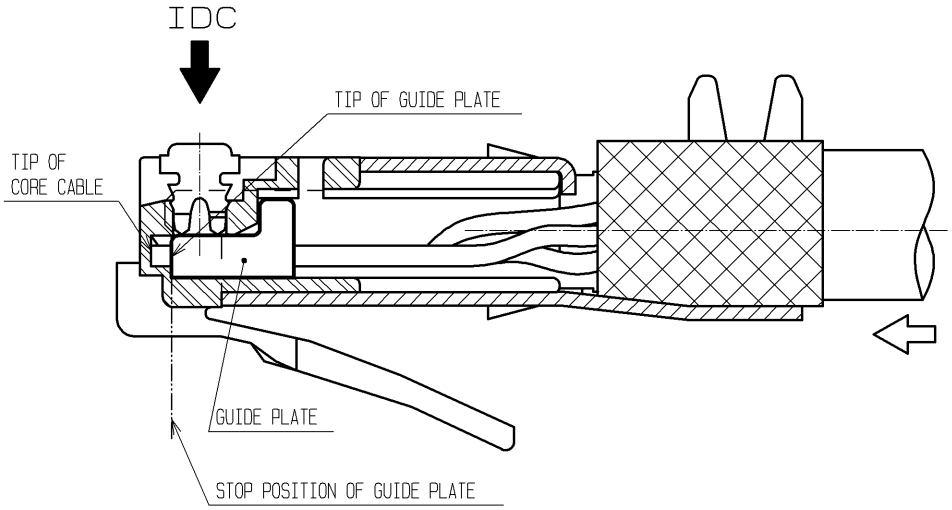 6-2. IDC HEIGHT IDC HEIGHT SHOULD BE AS SHOWN. 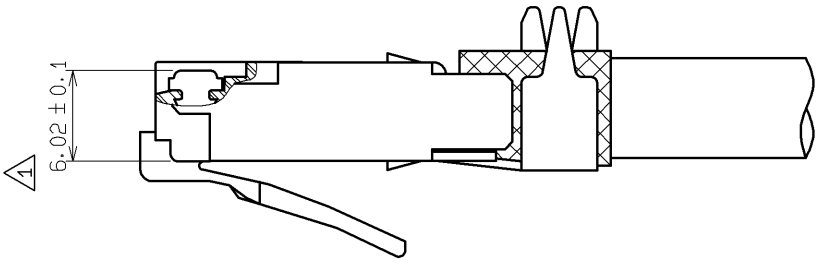
7. CABLE CLAMPING AND FOLDING GROUND PLATE	7-1. CABLE CLAMPING CLAMP BY HIROSE CLAMPING TOOLING. CABLE CLAMP HEIGHT △1 C/H : 6.5~6.9mm CABLE TENSILE FORCE 78.4N (8Kg) MIN 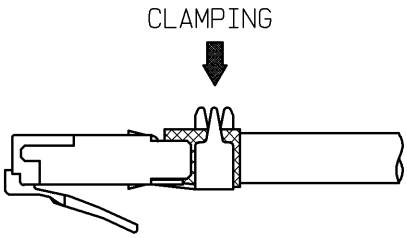

Apr.1.2024 Copyright 2024 HIROSE ELECTRIC CO., LTD. All Rights Reserved.

PROCEDURE	WORK CONTENTS
	7-2. FOLDING GROUND PLATE GROUND PLATE TO BE FOLDED AS SHOWN. FOLDED AT 45 DEGREE OR MORE. 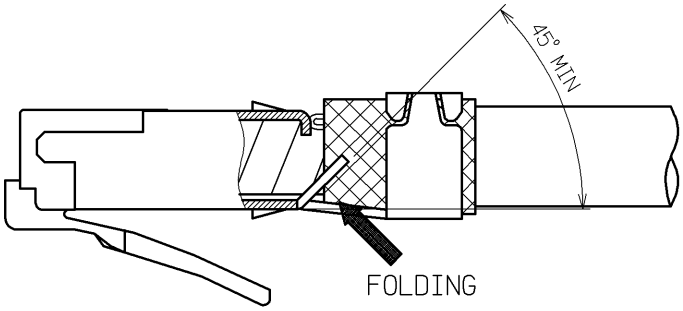
8. ATTACHMENT OF COVER	8-1. ASSEMBLY OF COVER ATTACH COVER TO CABLE, AND SNAP COVER. 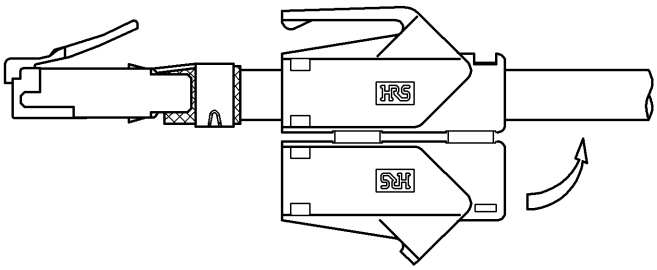 8-2. INSTALL COVER INSTALL SNAPPED COVER INTO PLUG BODY. 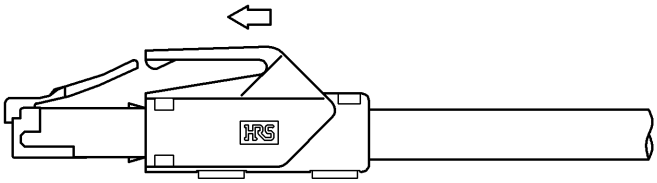

Apr.1.2024 Copyright 2024 HIROSE ELECTRIC CO., LTD. All Rights Reserved.

PROCEDURE	WORK CONTENTS
	8-3. CAUTION WHEN INSTALLING COVER GROUND LATCH MUST LOCK WITH HOLE COMPLETELY. SHULD BE NO EXCESS COPPER TAPE FROM COVER. CHECK IF LOCK LEVER CAN BE MOVED PUSHING COVER LOCK. 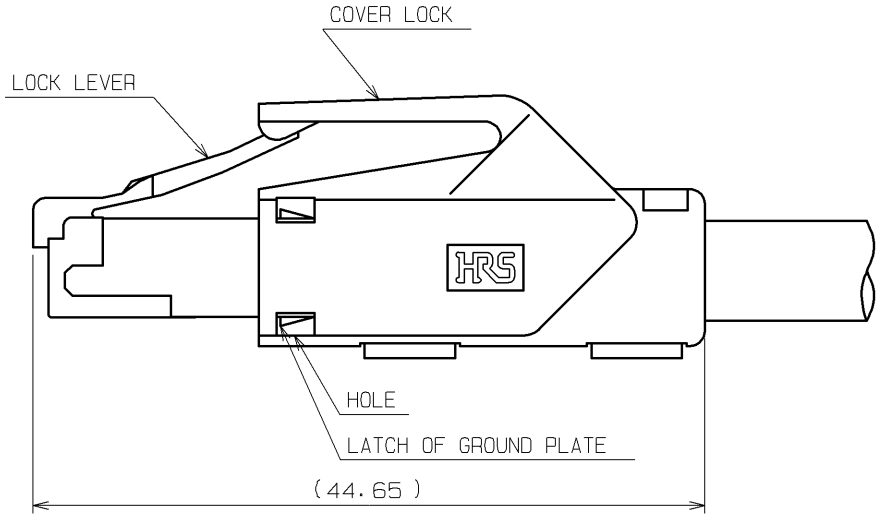

Apr.1.2024 Copyright 2024 HIROSE ELECTRIC CO., LTD. All Rights Reserved.