Mar.1.2024 Copyright 2024 HIROSE ELECTRIC CO., LTD. All Rights Reserved.
se of consideration for using Automotive equipment / device which demand high reliability, kindly contact our sales window correspond

	△數 COUNT	訂正事項 DESCRIPTION OF REVISIONS	擔當 B Y	檢圖 CHKD	年月日 DATE		△數 COUNT	訂正事項 DISCRIPTION OF REVISIONS	擔當 B Y	檢圖 CHKD	年月日 DATE
1	–	Revised	PJS	LHJ	16. 04. 15	4	–	Revised	PJS	LHJ	16. 07. 25
2	–	Revised	PJS	LHJ	16. 05. 12	5	–	Revised	PJS	KHJ	16. 11. 11
3	–	Revised	PJS	LHJ	16. 06. 16						. .

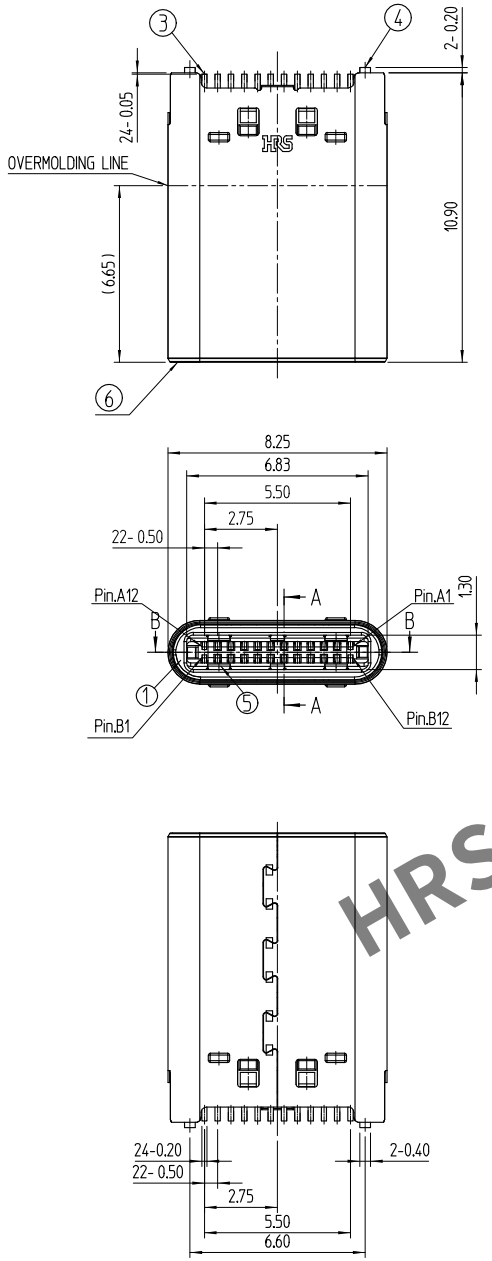

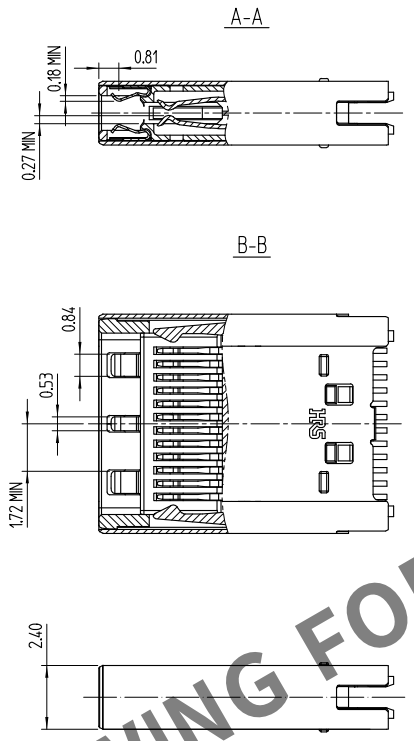

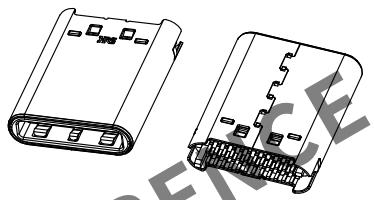
ISO-VIEW(N/S)

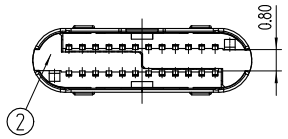

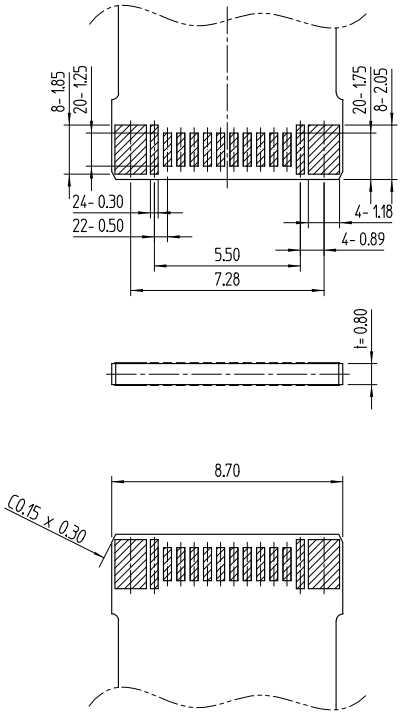
RECOMMENDED PCB LAY OUT
(General Tolerance : ±0.05)

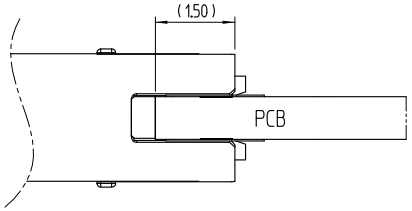
PCB MOUNTING POSITION

[NOTE] 1 GENERAL TOLERANCE : ±0.2
2 PACKING : 150 UNIT / TRAY

USB Type-C Plug Interface(Front View)

A12	A11	A10	A9	A8	A7	A6	A5	A4	A3	A2	A1
GND	RX2+	RX2-	Vbus	SBU1	D-	D+	CC	Vbus	TX1-	TX1+	GND
GND	TX2+	TX2-	Vbus	VCONN			SBU2	Vbus	RX1-	RX1+	GND
B1	B2	B3	B4	B5	B6	B7	B8	B9	B10	B11	B12

NO.	MATERIAL	FINISH,REMARKS	NO.	MATERIAL	FINISH,REMARKS
3	COPPER ALLOY	Gold Plating	6	STAINLESS STEEL	Nickel
2	LCP	UL94-V0, COLOR BLACK	5	STAINLESS STEEL	Nickel
1	PA	UL94-V0, COLOR BLACK	4	STAINLESS STEEL	Nickel

REMARK	DRAWN	DESIGNED	CHECKED	APPROVED	RELEASED
	J.S.PARK 16.04.15	J.S.PARK 16.04.15	H.J.LEE 16.04.15	T.S.KANG 16.04.15	DEPT 17.09.04 ENG

SCALE 5:1
UNITS mm

DRAWING NO. ADC3-631979
HRS HIROSE KOREA CO.,LTD.

PART NO. CX60-24S-UNIT
CODE NO CL6240-0001-9
1/1

HRS DRAWING FOR REFERENCE