Apr.1.2024 Copyright 2024 HIROSE ELECTRIC CO., LTD. All Rights Reserved.
In case of consideration for using Automotive equipment / device which demand high reliability, kindly contact our sales window or correspondents.

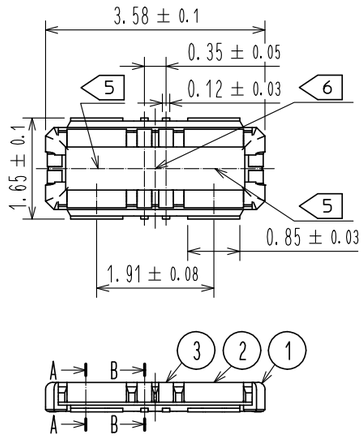

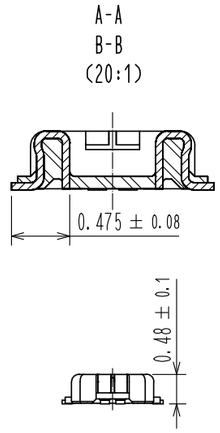

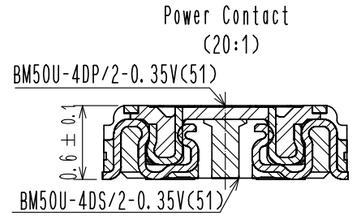

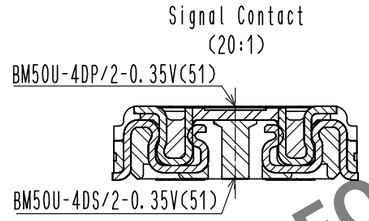

7 ◆Recommended reflow temperature profile using lead-free solder paste.

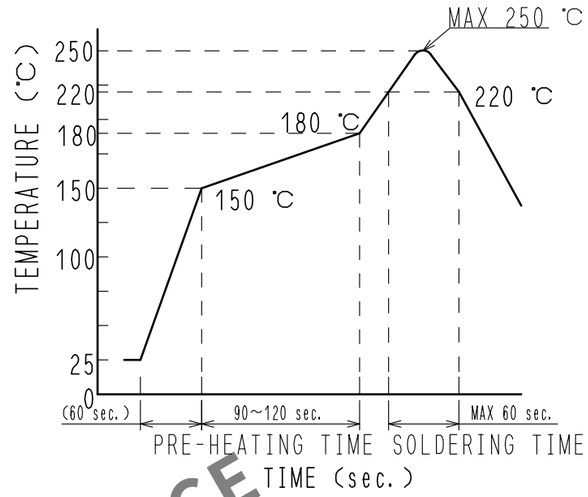

NOTE
1. All lead co-planarity shall be 0.08mm MAX.
2. Plating specifications
   Contact area : Gold 0.1μm MIN
   SMT lead : Gold 0.076μm MIN
   Under plating : Nickel 2μm MIN
   (Surface : Sealing)
3. Product color : Black
4. Manufacturing process : Insertion molding.
5. HRS mark and cavity No. are indicated.
6. Lot No. are indicated.
7. Reflow method:IR reflow
   Number of reflow cycles:2 cycles MAX.
   1)Reflow time
     Duration above 220℃, 60 sec MAX.
     (Peak temperature:250℃ MAX)
   2)Pre-heat time
     Pre-heat temperature(MIN):150℃
     Pre-heat temperature(MAX):180℃
     Pre-heat time:90-120 sec.
8. Please contact us in case you will make different settings from our recommendation.
   For the routing on the indicated PCB surface, apply solder resist in order for the insulation treatment.

◆Rcommended PCB layout

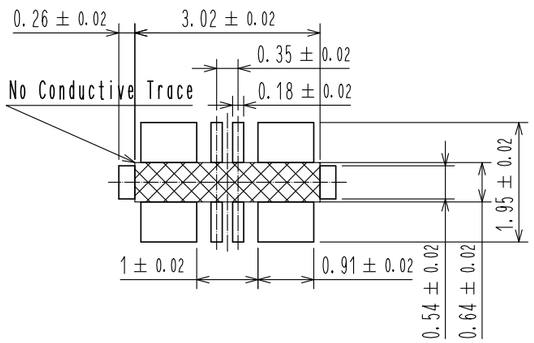

◆How to draw the electrical circuit
As shown in the figure below, each power supply unit including the lock metal fitting has to be mounted on the same PCB circuit.

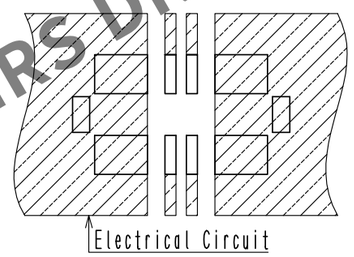

◆Rcommended metal mask dimensions. Metal mask thickness:80μm

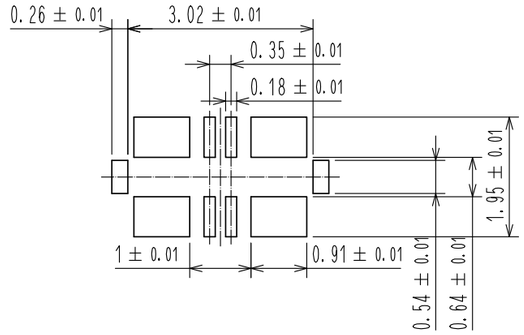

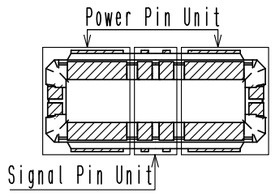

NO.	MATERIAL	FINISH , REMARKS	NO.	MATERIAL	FINISH , REMARKS
3	COPPER ALLOY	2	7	PS	CLEAR, REINFORCEMENT COLLAR
2	COPPER ALLOY	2	6	PS	CLEAR, COVER TAPE
1	LCP	UL94 V-0, Black	5	Polyester	BLACK, PLASTIC REEL
			4	PS	CLEAR, EMBOSSED CARRIER TAPE

UNITS	SCALE	COUNT	DESCRIPTION OF REVISIONS	DESIGNED	CHECKED	DATE
mm	10 : 1	0				

HRS HIROSE ELECTRIC CO., LTD.

APPROVED	WR. FUKUCHI	20211213	DRAWING NO.	EDC-386796-53-00
CHECKED	RT. SHIMIZU	20211213	PART NO.	BM50U-4DP/2-0.35V(53)
DESIGNED	TY. MORISHITA	20211213	CODE NO.	CL0677-0197-0-53
DRAWN	TY. MORISHITA	20211213		0 1/2

HRS DRAWING FOR REFERENCE

2021/12/13 TY. MORISHITA
RoHS2 (10 substances conform to EU)

Apr.1.2024 Copyright 2024 HIROSE ELECTRIC CO., LTD. All Rights Reserved.
In case of consideration for using Automotive equipment / device which demand high reliability, kindly contact our sales window corresponding to substances conform to RoHS2 (10 substances)
2021/12/10 19:10:08 TY. MORISHITA

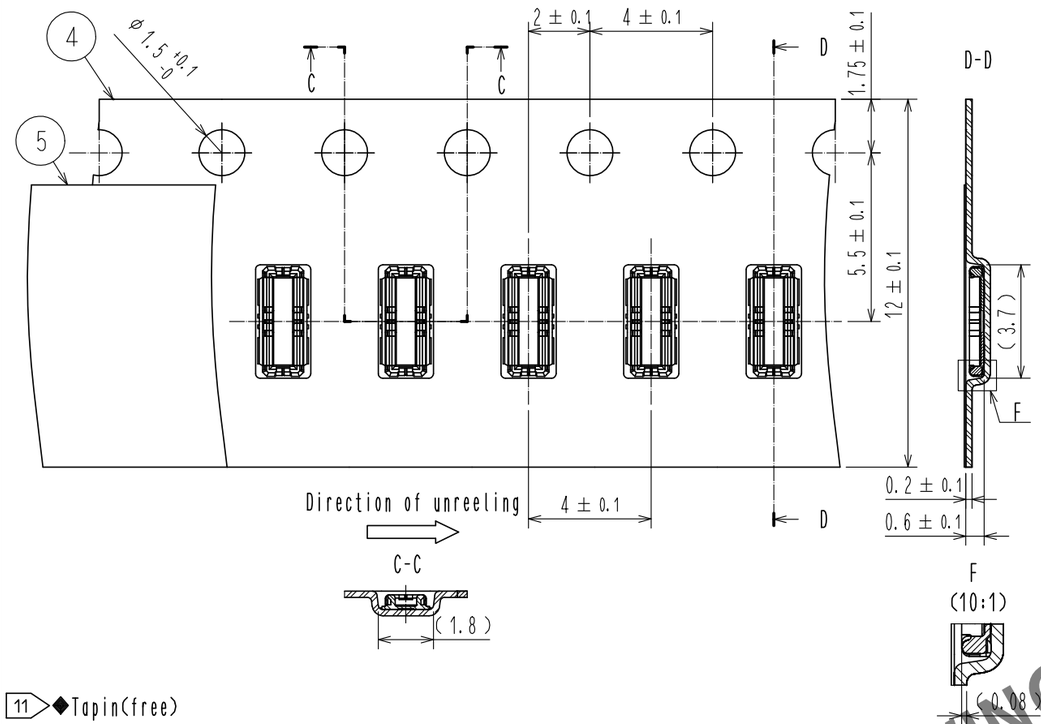

9 . Per reel 1,000 connectors.
10 . The dimensions in parentheses are for reference.
11 . Refer to JIS C 0806 and IEC60286-3
(Packaging of components for automatic handling)
12 . Wrap a reinforcing collar made by polystyrene
to the surface of emboss reel at the termination
sidein order to protect emboss carrier tape,
top cover tape.

◆Style and dimension of reel (free)

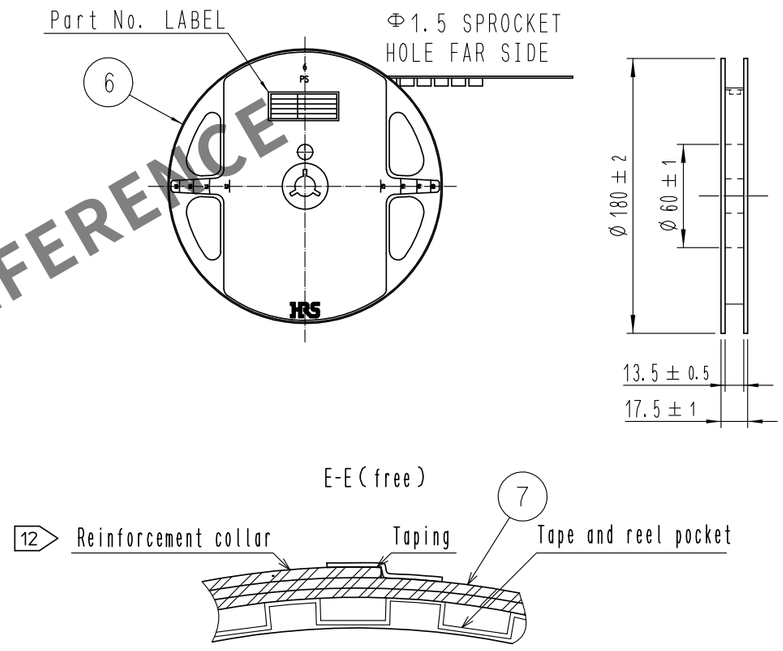

11 ◆Tapin(free)

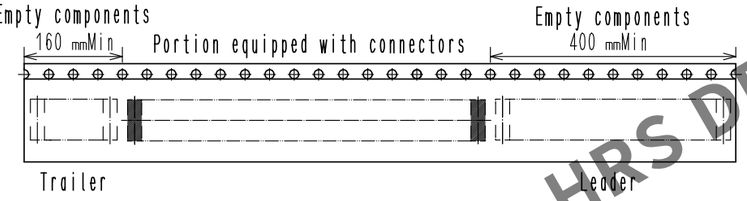

HRS DRAWING FOR REFERENCE

◆How to draw the FPC

BM50 series connector is intended to carry 15A electrical current for battery application. FPC may have less flexibility than usual, since the copper foil becomes wider and thicker to carry current of 15A.
Please design the FPC to have a flexibility to absorb the displacement* of the connector cased by fixing PCB and battery.

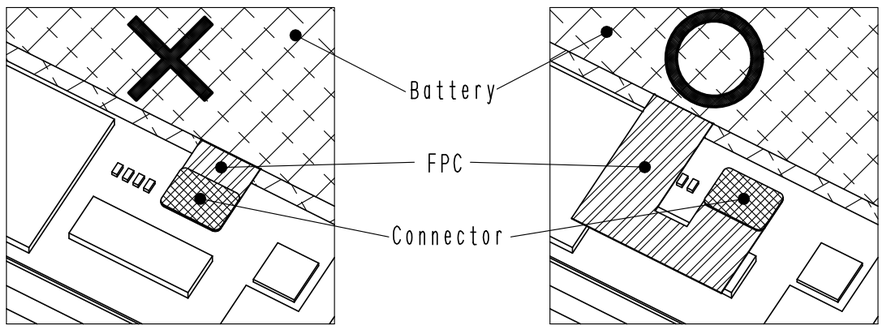

*Possible problems caused by connector mating in incorrect positioning.
Mating the connector in incorrect positioning could lose the function of the connector.

① Insulator could be broken.

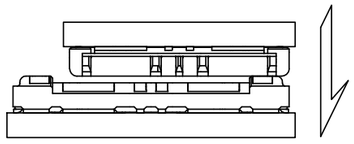

② It could apply excessive mechanical stress to single side of the contact.

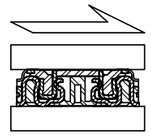

HRS	DRAWING NO.	EDC-386796-53-00
	PART NO.	BM50U-4DP/2-0.35V(53)
	CODE NO.	CL0677-0197-0-53 △0 2/2