Apr.1.2024 Copyright 2024 HIROSE ELECTRIC CO., LTD. All Rights Reserved.
In case of consideration for using Automotive equipment / device which demand high reliability, kindly contact our sales window correspondents.

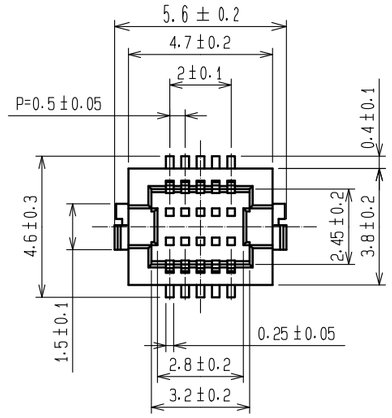

A−A (10 : 1)

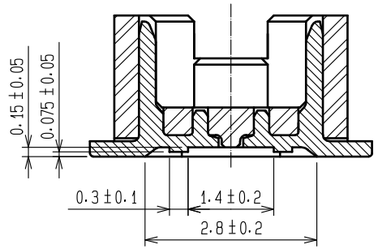

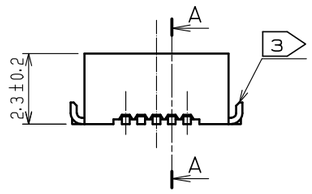

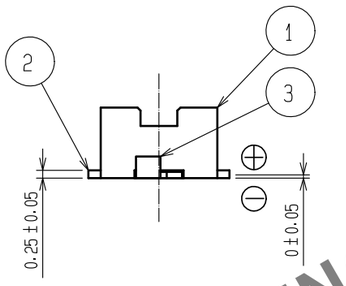

RECOMMEND METAL MASK PATTERN (10:1)

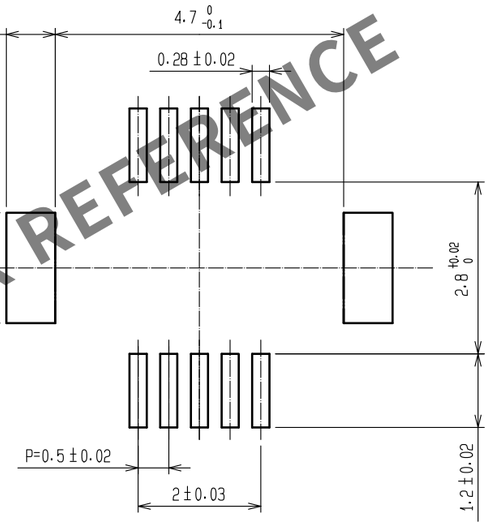

RECOMMENDED LAND PATTERN (10:1)

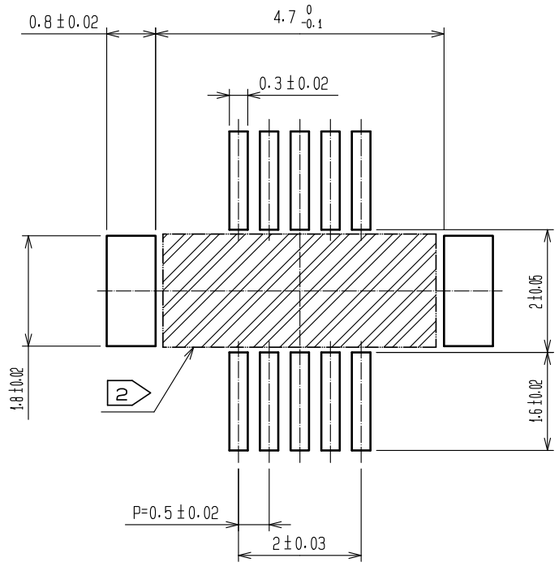

RECOMMENDED THICKNESS OF
SOLDER PASTE : 120 μm

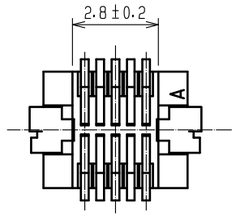

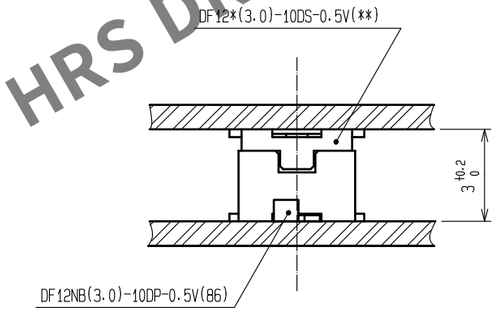

HRS DRAWING FOR REFERENCE

NOTES 1 : LEAD CO-PLANARITY SHALL BE 0.08 mm MAX.
2 : IF THERE IS PATTERN ON ▨ PART, THERE IS A POSSIBILITY THAT IT WILL MAKE CONTACT WITH THE LEADS.
3 : REINFORCED METAL FITTINGS AS FOLLOWS.

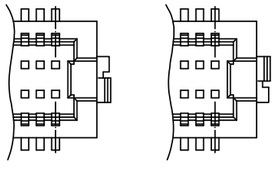

NO.	MATERIAL	FINISH , REMARKS
2	PHOSPHOR BRONZE	CONTACT AREA:GOLD PLATED 0.2μm min LEAD AREA:GOLD PLATED 0.015μm min OTHERS(UNDER PLATING):NICKEL PLATED 2μm min
1	POLYAMIDE	UL94V-0, BLACK

NO.	MATERIAL	FINISH , REMARKS
6	PS	BLACK (PLASTIC REEL)
5	POLYESTER	CLEAR (COVER TAPE)
4	PS	CLEAR (EMBOSSED CARRIER TAPE)
3	BRASS	TIN PLATED 2μm min (UNDER PLATING):NICKEL 1μm min

UNITS	SCALE	COUNT	DESCRIPTION OF REVISIONS	DESIGNED	CHECKED	DATE
mm	5 : 1	0				

HRS HIROSE ELECTRIC CO., LTD.

APPROVED	: WR. FUKUCHI	20190828
CHECED	: TS. MIYAZAKI	20190827
DESIGNED	: KT. KUSAKA	20190827
DRAWN	: KT. KUSAKA	20190827

DRAWING NO. EDC-389275-51-01
PART NO. DF12NB(3.0)-10DP-0.5V(51)
CODE NO. CL537-0299-0-51
0 1/2

FORM HC0011-5-7

Apr.1.2024 Copyright 2024 HIROSE ELECTRIC CO., LTD. All Rights Reserved.
In case of consideration for using Automotive equipment / device which demand high reliability, kindly contact our sales window correspondents.

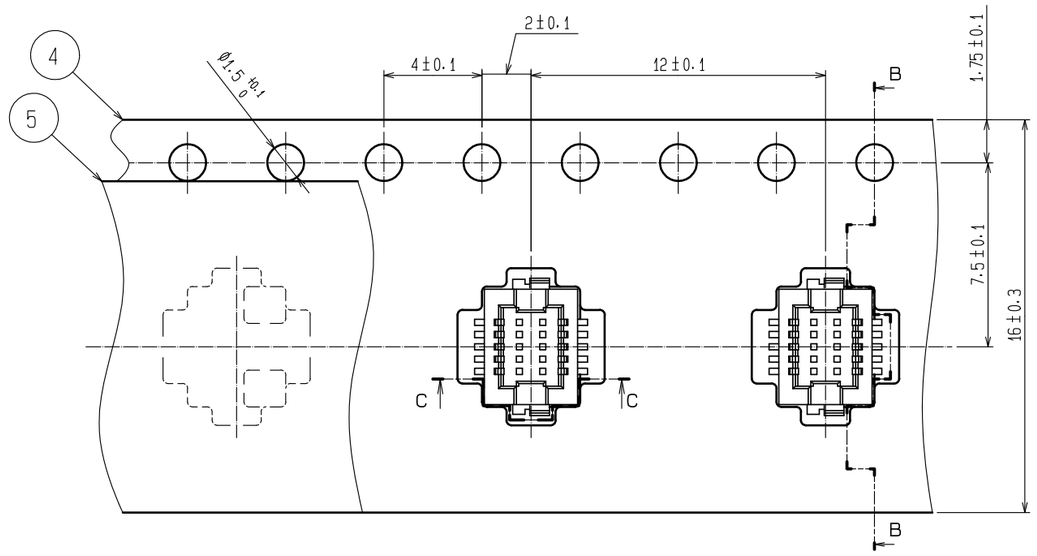

DIRECTION OF UNREELING

B–B

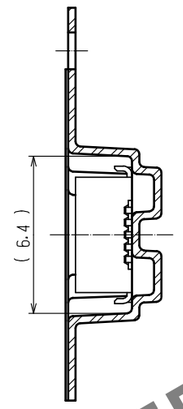

STYLE AND DIMENSION OF REEL

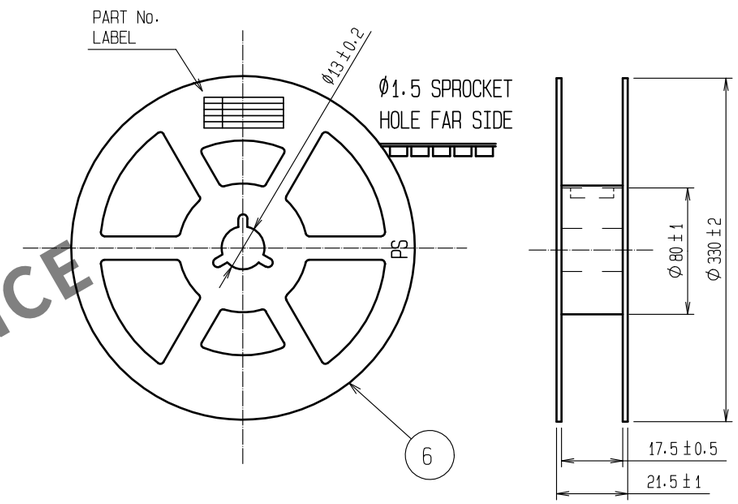

C–C

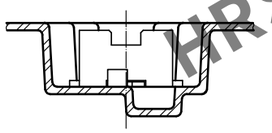

HRS DRAWING FOR REFERENCE

NOTES 4 : 1 REEL 1000 CONNECTORS.
5 : AT THE BEGINNING OF THE REEL, 30 COMPONENTS SHALL BE EMPTY.
AT THE END OF THE REEL, 20 COMPONENTS SHALL BE EMPTY.
6 : PEEL FORCE REFERS TO JIS C 0806.
7 : THE REEL IS PACKED WITH A POLYETHYLENE MATERIAL.

HRS	DRAWING NO.	EDC-389275-51-01
	PART NO.	DF12NB(3.0)-10DP-0.5V(51)
	CODE NO.	CL537-0299-0-51 △0 2/2