Apr.1.2024 Copyright 2024 HIROSE ELECTRIC CO., LTD. All Rights Reserved.
In case of consideration for using Automotive equipment / device which demand high reliability, kindly contact our sales window correspondents.

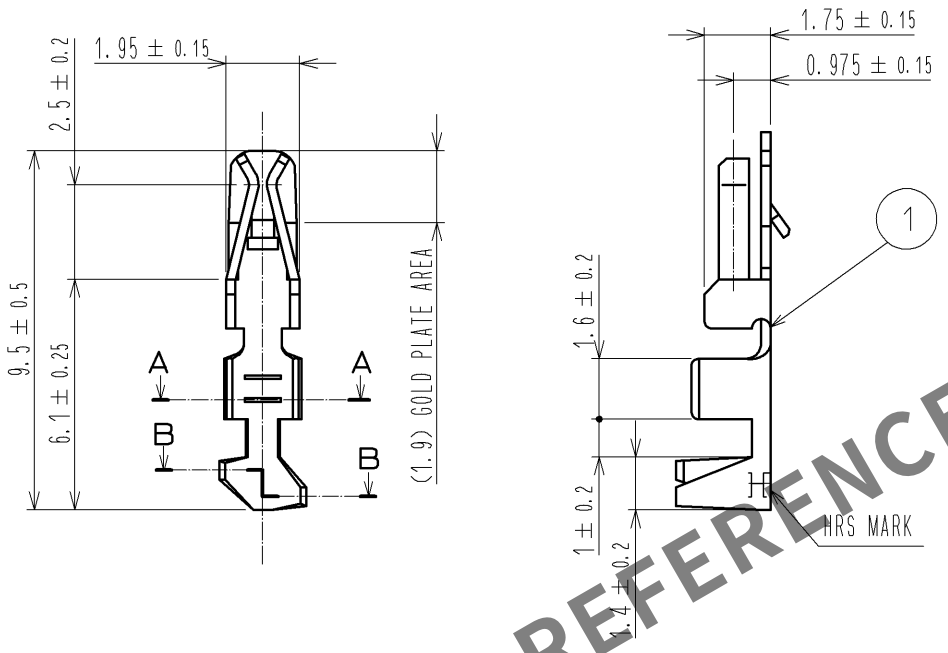

HRS DRAWING FOR REFERENCE

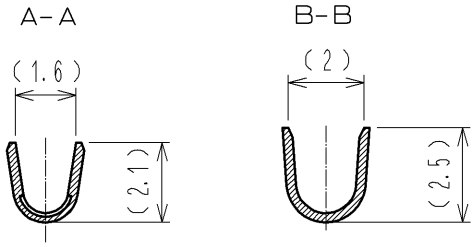

NOTE 1 APPLICABLE CABLE : AWG20-22

NO.	MATERIAL	FINISH . REMARKS
1	PHOSPHOR BRONZE	CONTACT AREA: GOLD PLATING 0.2μm OTHER AREA : NICKEL PLATING 1μm

UNITS mm	SCALE 5 : 1	COUNT	DESCRIPTION OF REVISIONS	DESIGNED	CHECKED	DATE

HIROSE ELECTRIC CO., LTD.

APPROVED	KI. AKIYAMA	10.12.16
CHECKED	HK. UMEHARA	10.12.16
DESIGNED	HT. SATO	10.12.16
DRAWN	MI. SAKIMURA	10.12.16

DRAWING NO.	EDC4-021361-01
PART NO.	DF1B-2022SCA
CODE NO.	CL541-0663-4-00

1/1

FORM HC0011-5-51