Apr.1.2024 Copyright 2024 HIROSE ELECTRIC CO., LTD. All Rights Reserved.
In case of consideration for using Automotive equipment / device which demand high reliability, kindly contact our sales window correspondents.

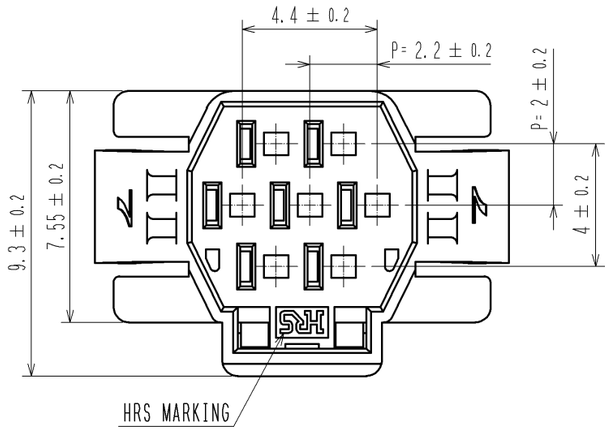

7 MATING FIGURE (PANEL MOUNTED)

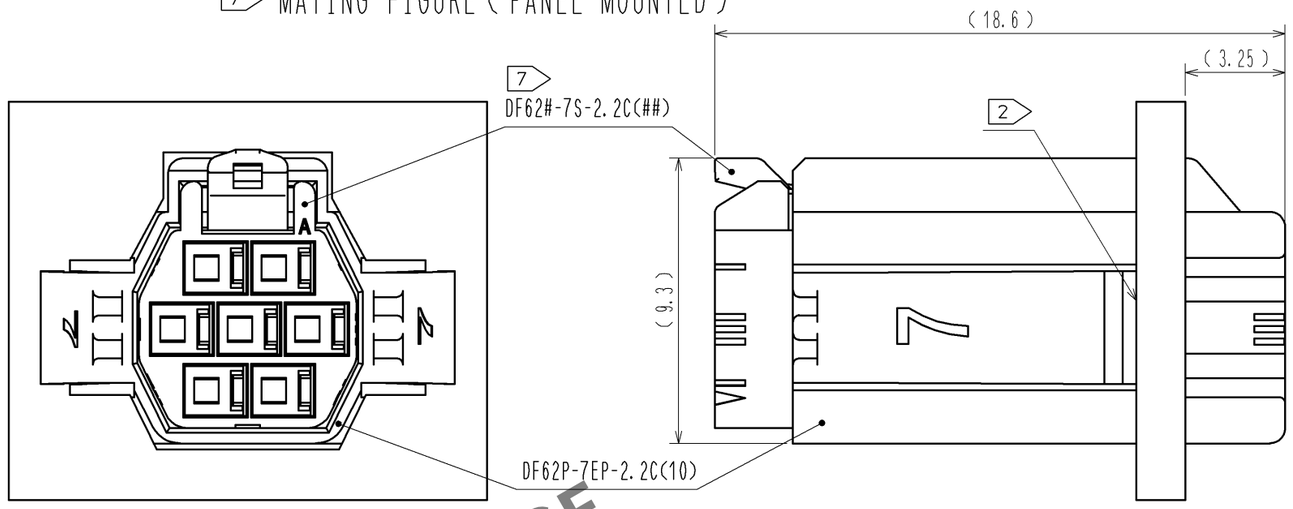

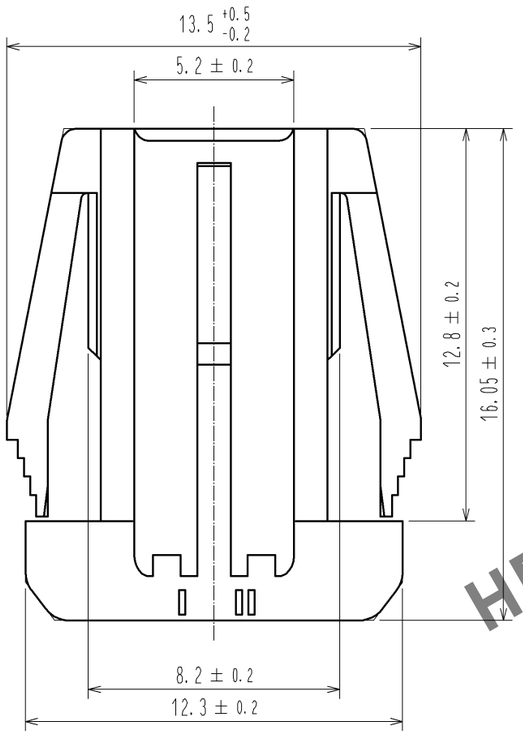

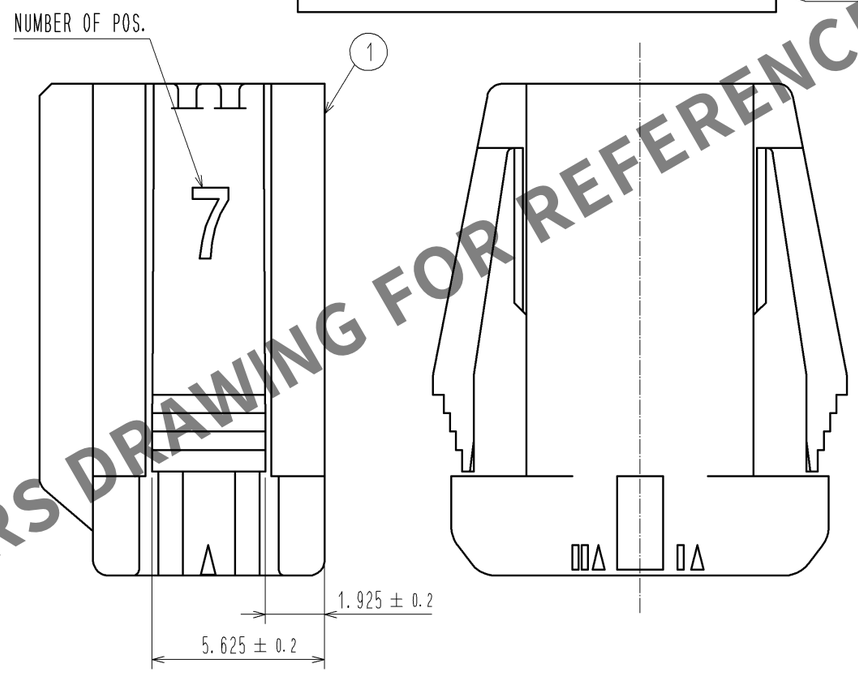

3 4 RECOMMENDED PANEL CUTOUT DIMENSION

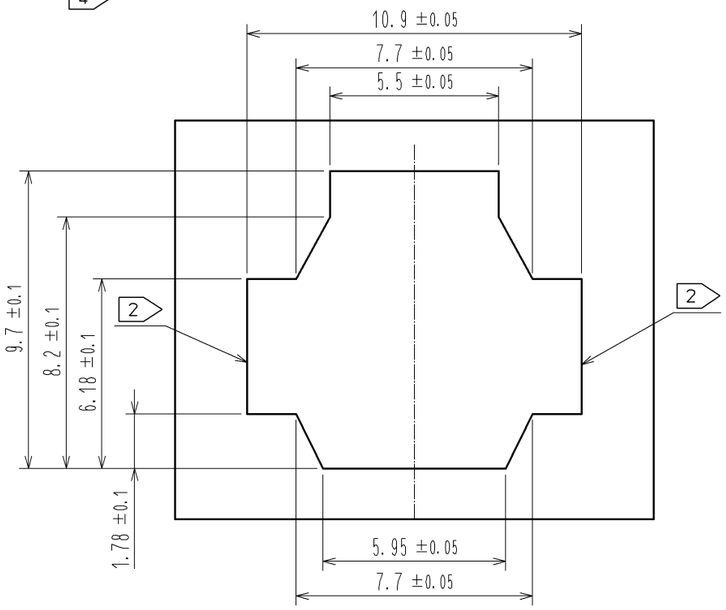

HRS DRAWING FOR REFERENCE

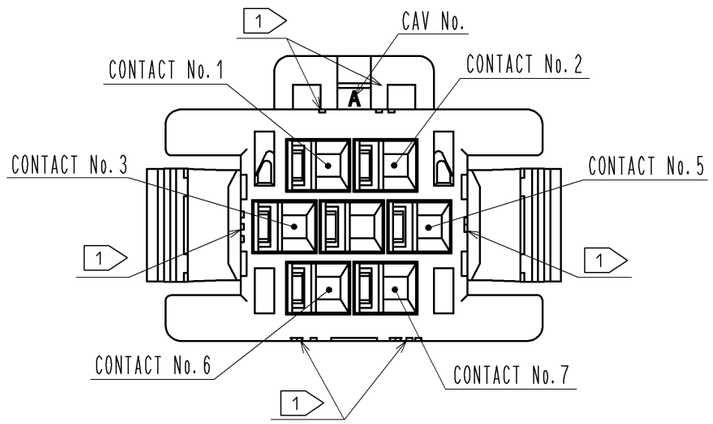

1 FIGURE-1 CONTACT No. MARKING (10:1)

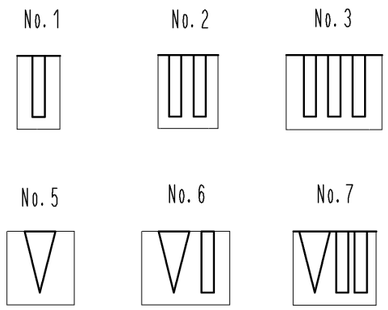

NOTE.
1. MARKINGS AT THE INDICATED POSITIONS ARE CONTACT NO. MARKING. AND SHAPES ARE SHOWN IN FIGURE-1.
2. PLEASE USE THE NON-RADIUS SIDE FOR THE PANEL HOOKING AREA.
3. APPLICABLE PANEL THICKNESSING IS 2.3 TO 0.5mm.
4. CONSULT HIROSE FOR THE OTHER PANEL CUTOUT DESIGNS THAN THE RECOMMENDED ONE.
5. PER PACK : 100 PIECES.
6. THE DIMENSIONS IN PARENTHESIS ARE FOR REFERENCE.
7. THIS FIGURE SHOWS THE MATED CONDITION WITH DF62B-7S-2.2C.

NO.	MATERIAL	FINISH , REMARKS	NO.	MATERIAL	FINISH , REMARKS
			1	PBT	UL94V-0(WHITE)

UNITS	SCALE	COUNT	DESCRIPTION OF REVISIONS	DESIGNED	CHECKED	DATE
mm	5 : 1					

HIROSE ELECTRIC CO., LTD.

APPROVED	: KI. AKIYAMA	14. 03. 10	DRAWING NO.	EDC3-349140-01
CHECED	: HK. UMEHARA	14. 03. 10	PART NO.	DF62P-7EP-2. 2C(10)
DESIGNED	: TS. KUMAZAWA	14. 03. 07	CODE NO.	CL544-0548-5-10
DRAWN	: TS. KUMAZAWA	14. 03. 07		1/1

FORM HC0011-5-7_AN