Apr.1.2024 Copyright 2024 HIROSE ELECTRIC CO., LTD. All Rights Reserved.

# Contents ⚠6

**1. Introduction** · · · · · · · · · · · · · · · · · · · · · · · · · · P2
- **1-1. Scope**

**2. Product Overview** · · · · · · · · · · · · · · · · · · · · · · · · · · P2-3
- **2-1. Connectors**
- **2-2. Part Name**

**3. Steps for making harness** · · · · · · · · · · · · · · · · · · · · · · · · · · P4-14
- **3-1. Wire Stripping**
- **3-2. Crimping**
- **3-3. Inserting crimp terminals into sockets**
- **3-4. Electrical inspection**
- **3-5. Repair of crimp terminal**
- **3-6. Waterproof pin insertion**

**4. DF62WP Panel Installation Procedure** · · · · · · · · · · · · · · · · · · P 15-18
- **4-1. Mounting panel**
- **4-2. Removal from panel**

**5. Precautions (Handling of harness products)** · · · · · · · · · · · · · · · · · · P19-22

**6. In times of trouble (Q & A)** · · · · · · · · · · · · · · · · · · · · · · · · P23-27
- **6-1. Crimp terminal is removed**
- **6-2. Difficulty inserting crimping terminal**
- **6-3. Difficulty repairing crimping terminal**

| | COUNT | DESCRIPTION OF REVISIONS | DESIGNED | CHECKED | DATE |
|---|---|---|---|---|---|
| ⚠6 | 9 | DIS-H-00020411 | TS.KUMAZAWA | SZ.ONO | 20240416 |

Name TITLE

DF62W Series Cable Assembly Procedure

DF62WP Series Panel Installation Manual

HRS HIROSE ELECTRIC CO., LTD.

| | | |
|---|---|---|
| APPROVED | KI.AKIYAMA | 20140215 |
| CHECKED | OM.MIYAMOTO | 20140214 |
| DESIGNED | KT.ISHII | 20140213 |
| WRITTEN | KT.ISHII | 20140213 |

# 1. Introduction

## 1-1. Scope

This document specifies the steps from crimping the DF62W-series crimped terminals to cables (AWG20 to AWG30) to inserting the terminals to crimping sockets, and inserting the terminal into the crimp case, and the procedure for mounting the panel of the DF62WP series.

# 2. Product Overview

## 2-1. Connectors

■Crimping Cases

**DF62W # – ＊ EP – 2.2 C**

❶ ❷ ❸❹ ❺ ❻

| |
|---|
| ❶ Series Name: DF62W or DF62WZ |
| ❷ Wire Seal<br># = None or A-E |
| ❸ Number of poles: 2 to 9 |
| ❹ Connector types<br>S: Socket<br>EP: In-line plug |
| ❺ Contact pitch: 2.2 mm |
| ❻ Connection part type/terminal shape<br>C: Crimping case |

■Crimping Cases (Panel Waterproof Type)

**DF62WP-＊/＊/＊/＊ EP-2.2 C**

❶ ❷ ❸ ❹ ❺

| |
|---|
| ❶ Series Name: DF62WP |
| ❷ No. of poles: 2 to 9<br>“/” Indicates that the connector is a composite connector with the number of poles separated by "/" |
| ❸ Connector type<br>EP: In-line plug |
| ❹ Contact pitch: 2.2 mm |
| ❺ Connection part type/terminal<br>C: Crimping case |

■Waterproof pin

**DF62W – WP**

❶

| |
|---|
| ❶ Application<br>WP: Waterproof pin |

■Crimped terminals

**DF62W – EP 2226 PCF A**

❶ ❷ ❸ ❹

| |
|---|
| ❶ Application<br>EP: In-line |
| ❷ Compatible cables<br>2022: AWG20 to 22 2226: AWG22 to 26<br>2830: AWG28 to 30 |
| ❸ Shape/packing<br>SCF: Socket terminal, reeled<br>SC : Socket terminal, separate<br>PCF: Plug terminal, reeled<br>PC : Plug terminal, separate |
| ❹ Plating<br>A: Gold plating<br>No: Tin plating |

Apr.1.2024 Copyright 2024 HIROSE ELECTRIC CO., LTD. All Rights Reserved.

## 2-2. Part Name ⚠6

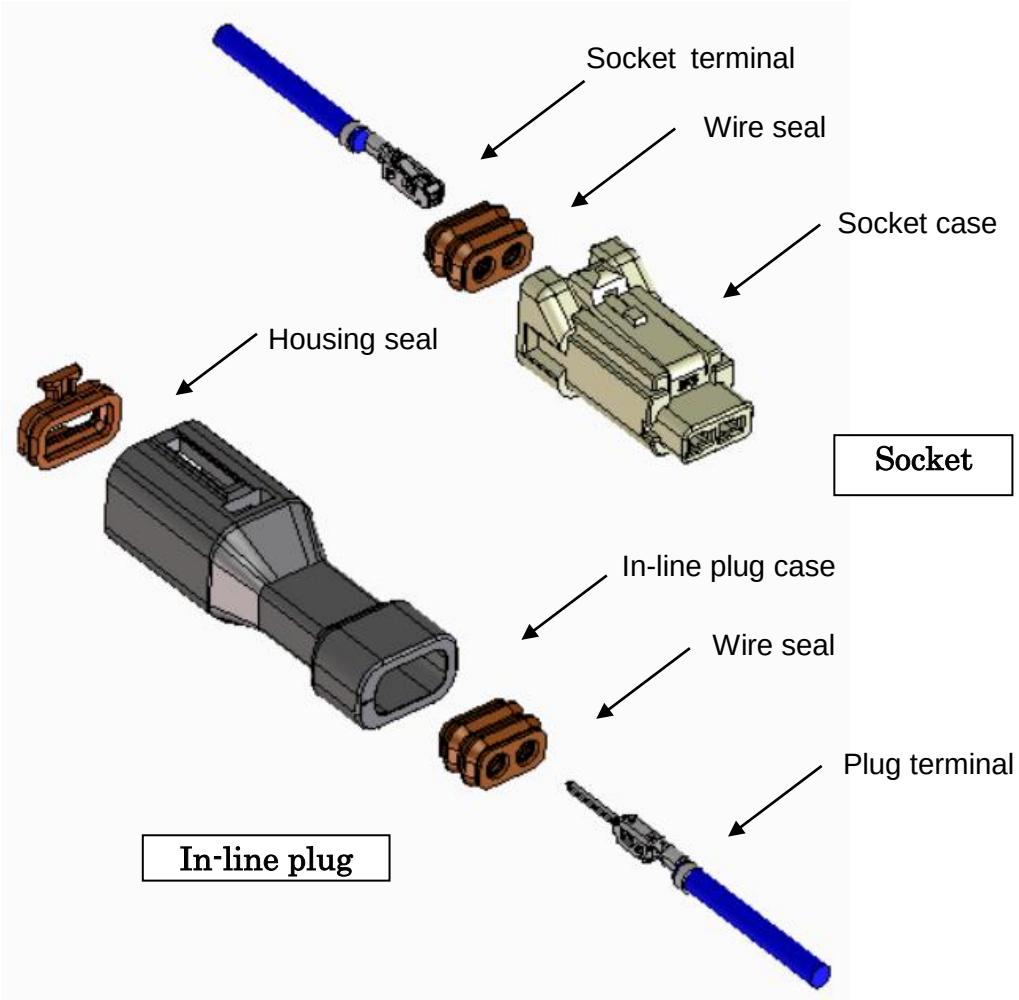


Figure 2-2-1. Part Name

Apr.1.2024 Copyright 2024 HIROSE ELECTRIC CO., LTD. All Rights Reserved.

Apr.1.2024 Copyright 2024 HIROSE ELECTRIC CO., LTD. All Rights Reserved.

## 3. Steps for making harness

### 3.1. Wire stripping

Strip wires in accordance with Crimping Quality Standards (ATAD-H0762/0763).
In doing so, make sure there is no scratch on cable cores.

### 3.2.Crimping

6

Handling of the crimping machine body and applicator (AP105-DF62W-**(**=2022, 2226, 2830)) for reel products
Set the applicator and crimping terminal to the crimping machine body and perform crimping work according to the manual.
At that time, in accordance with the crimping condition table and crimping quality standard document (ATAD-H0762/0763), crimping height and crimping shape should be checked.
For separate product, set the crimping terminal to the crimping tool body in accordance with the manual of the manual crimping tool (HT 802 - DF 62 W -** (**= 2022, 2226)) (ATAD-P0230/0283) and perform crimping work.
In this case, the "crimping conditions and crimping quality standard table" in the instruction manual and the crimping quality standard manual (ATAD-H0762/0763)
Check the crimping height and crimping shape.

### 3-3. Inserting crimp terminals into sockets

#### 3-3-1.DF62W#- * S-2.2C and DF62W#- * How to insert EP-2.2C

Hold the cable of crimped terminal, and insert it into each terminal hole of crimping sockets.
(Insert the terminal in the direction of arrows below.)
*The figures show insertion to DF62W-2poles connector.

1) Preparation for insertion

Align the crimping terminal with the crimping socket.

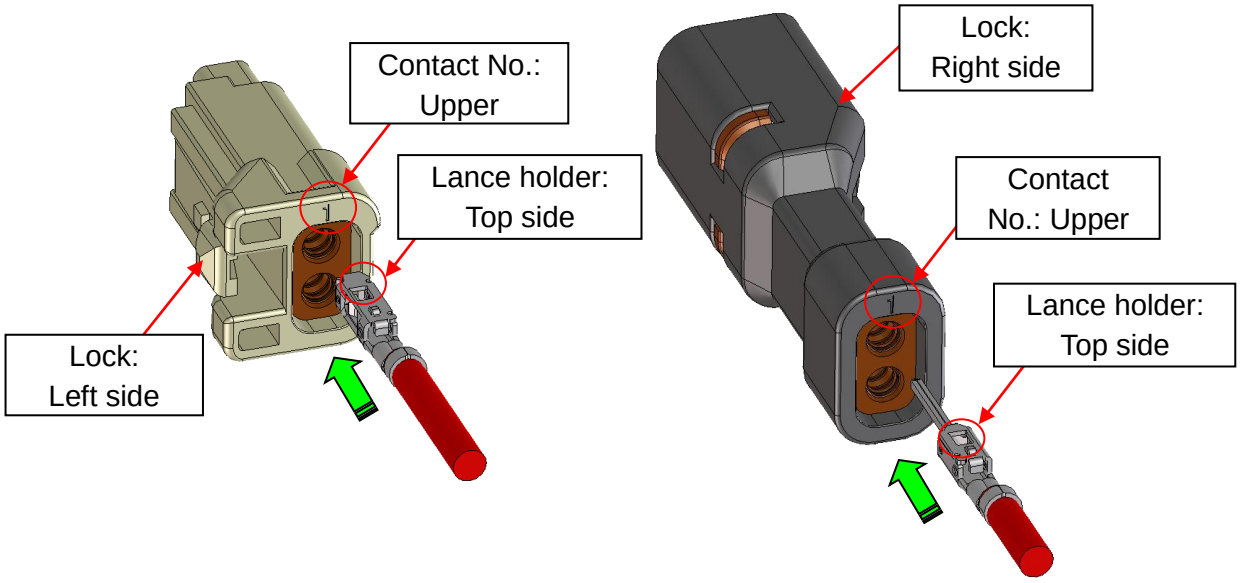


Figure 3-3-1. Before inserting the terminal

2) Insert

Insert the crimping terminal by holding the wire in the direction indicated by the arrow.
At this time, insert the crimping terminal by passing it through the wire seal hole.

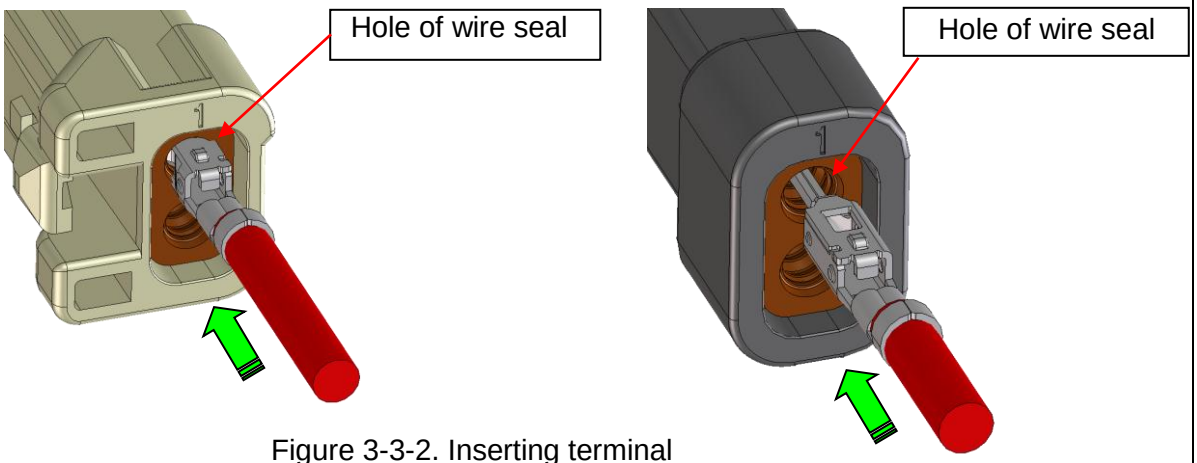


Figure 3-3-2. Inserting terminal

**[Notes on insertion]**

To maintain reliable performance (Contact performance, waterproof performance, etc.), the crimping terminals must be set straight, Insert them.

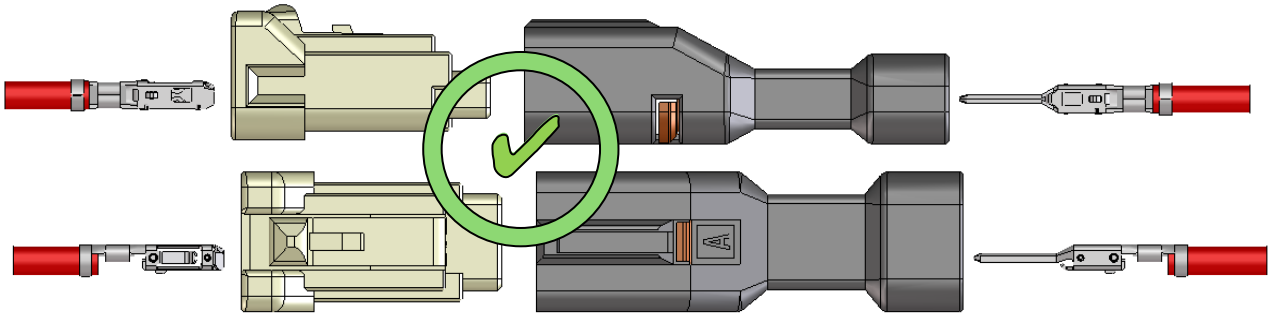

Horizontal insertion

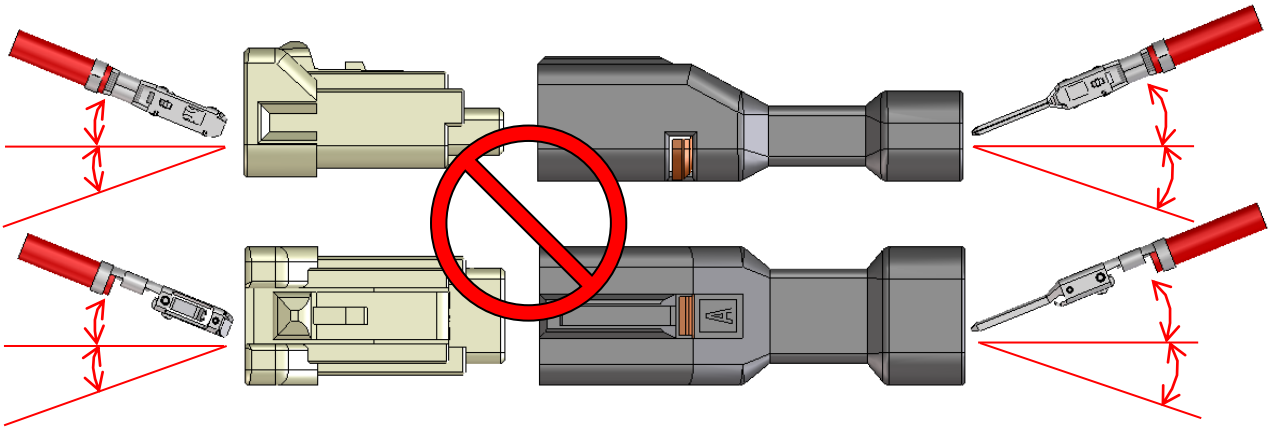

Angled insertion

Figure 3-3-3. Prohibition of diagonal insertion

Apr.1.2024 Copyright 2024 HIROSE ELECTRIC CO., LTD. All Rights Reserved.

**[Notes on re-insertion]**

When re-inserting the crimping terminal in the middle of insertion, the wire seal was restrained so as not to come off. Pull the cable in the state.
In case the wire seal comes off, make sure that there is no scratch on the wire seal.
Refer to the product drawing, pay attention to the direction and insert it again.

3) Insertion complete

Check that the lance on the crimping socket is caught on the crimping terminal's lance holder.

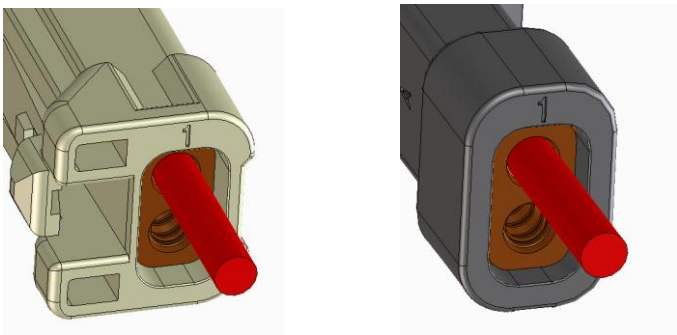

Figure 3-3-4. After inserting the terminal

[Method 1]
Make sure that the crimping terminal cannot be removed by lightly pulling the wire.

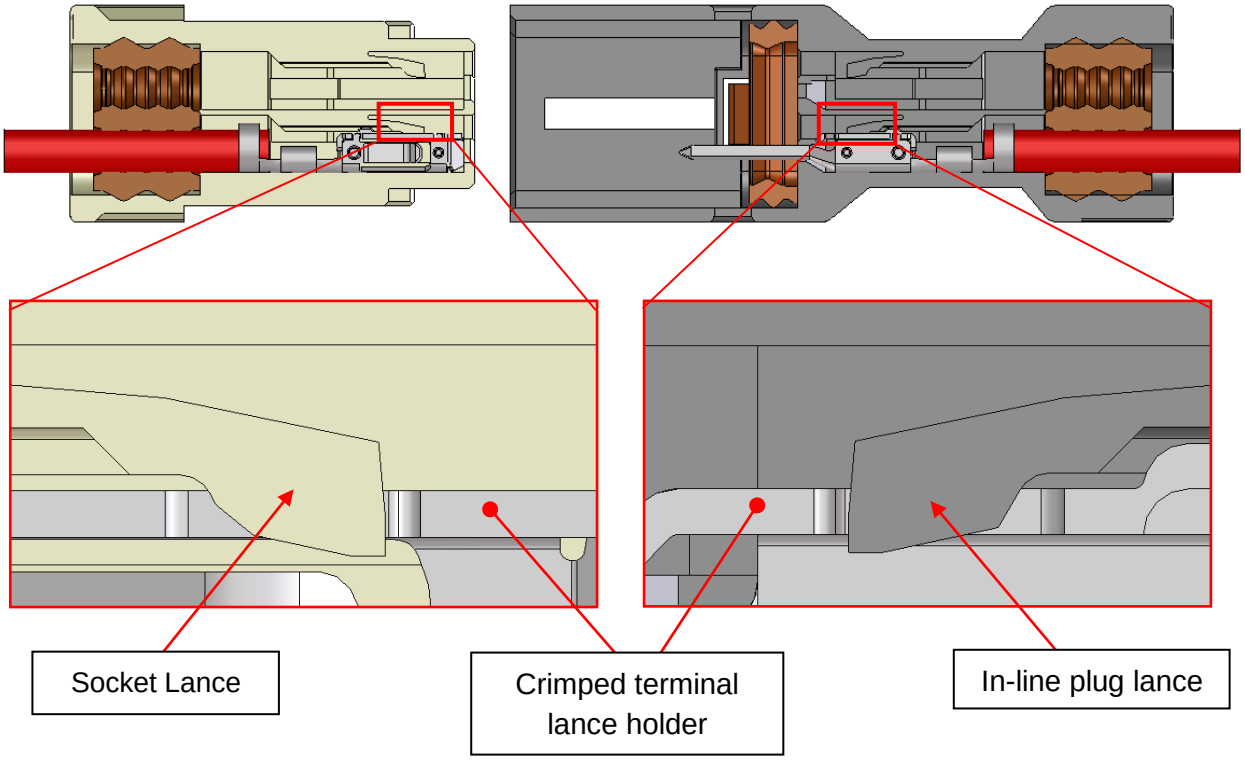


Figure 3-3-5. Checking the lance

Apr.1.2024 Copyright 2024 HIROSE ELECTRIC CO., LTD. All Rights Reserved.

[Method 2] 6

Visually check the lance section. Make sure that the mold lance section is hidden by the crimping terminal.

Confirm that the mold lance section is hidden by the crimping terminal. (See Figure 3-3 -6)

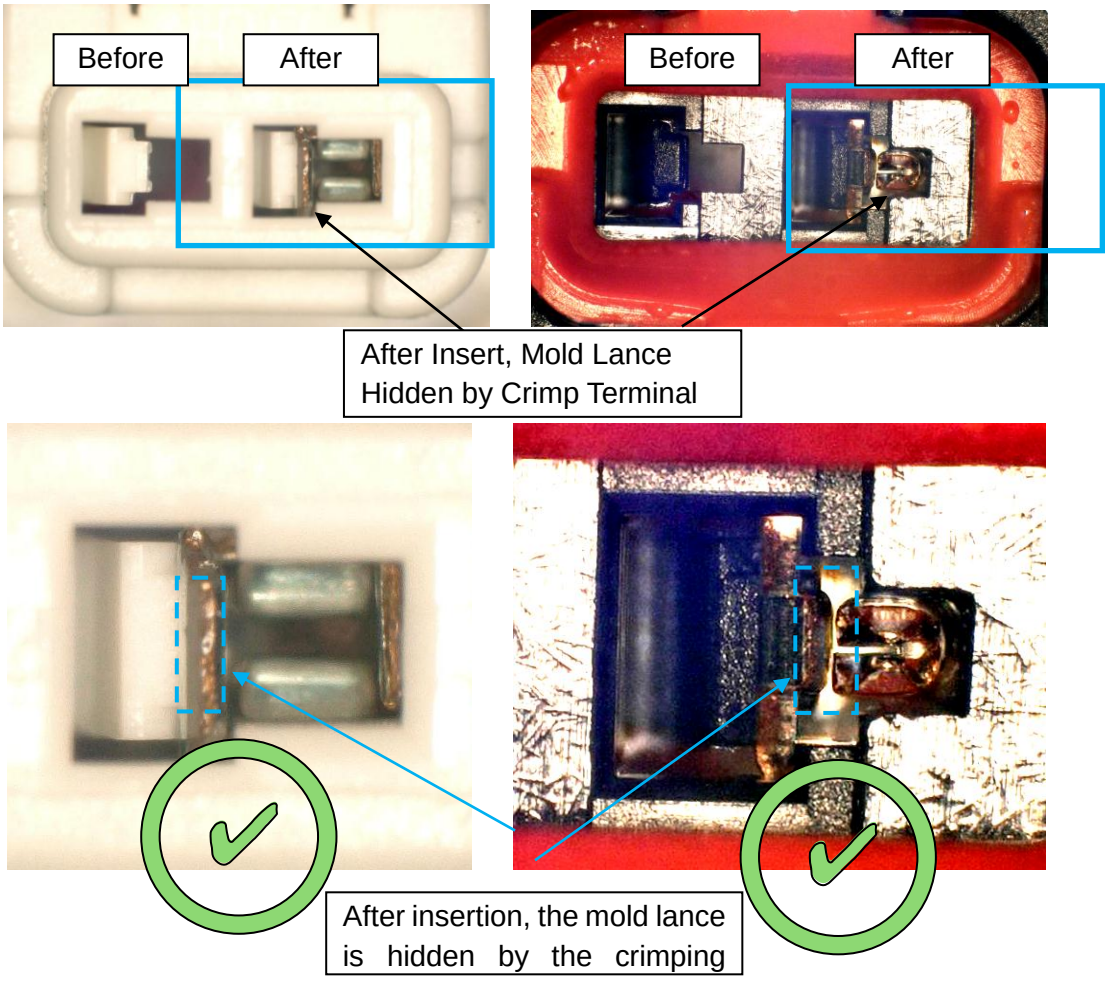


Figure 3-3-6. Lance engagement check (OK)

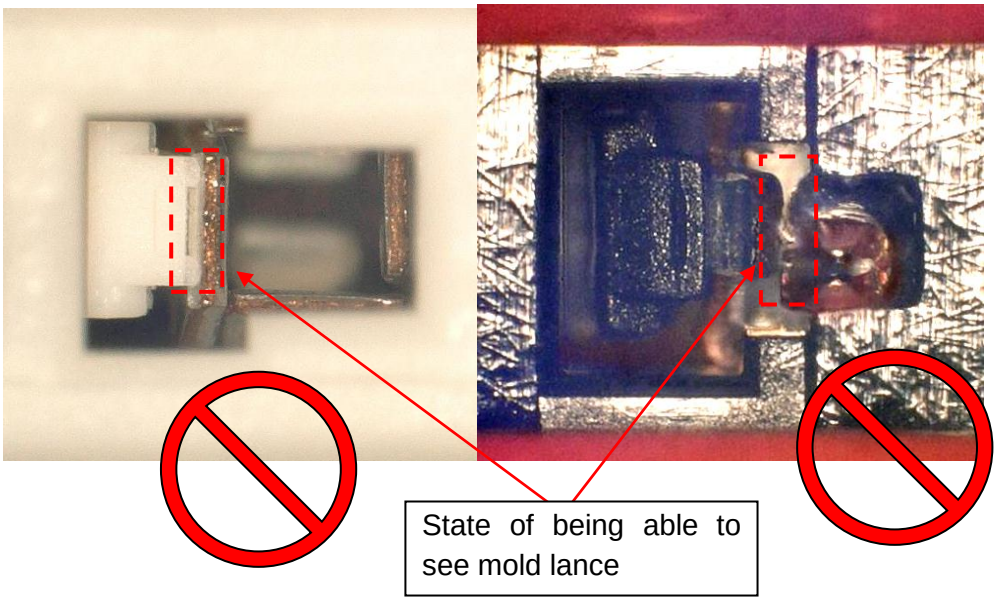


Figure 3-3-7. Lance hook check (NG: half insert)

Apr.1.2024 Copyright 2024 HIROSE ELECTRIC CO., LTD. All Rights Reserved.

Apr.1.2024 Copyright 2024 HIROSE ELECTRIC CO., LTD. All Rights Reserved.

### 3-3-2. DF62WP series insertion method

*The figures show insertion to DF62WP-3/4/6/2EP-2.2C

Hold the cable of a crimped terminal, and insert it to each terminal hole of crimping sockets. (Insert the terminal in the direction of arrows below.)

1) Preparation for insertion

Align the crimping terminal with the crimping case.

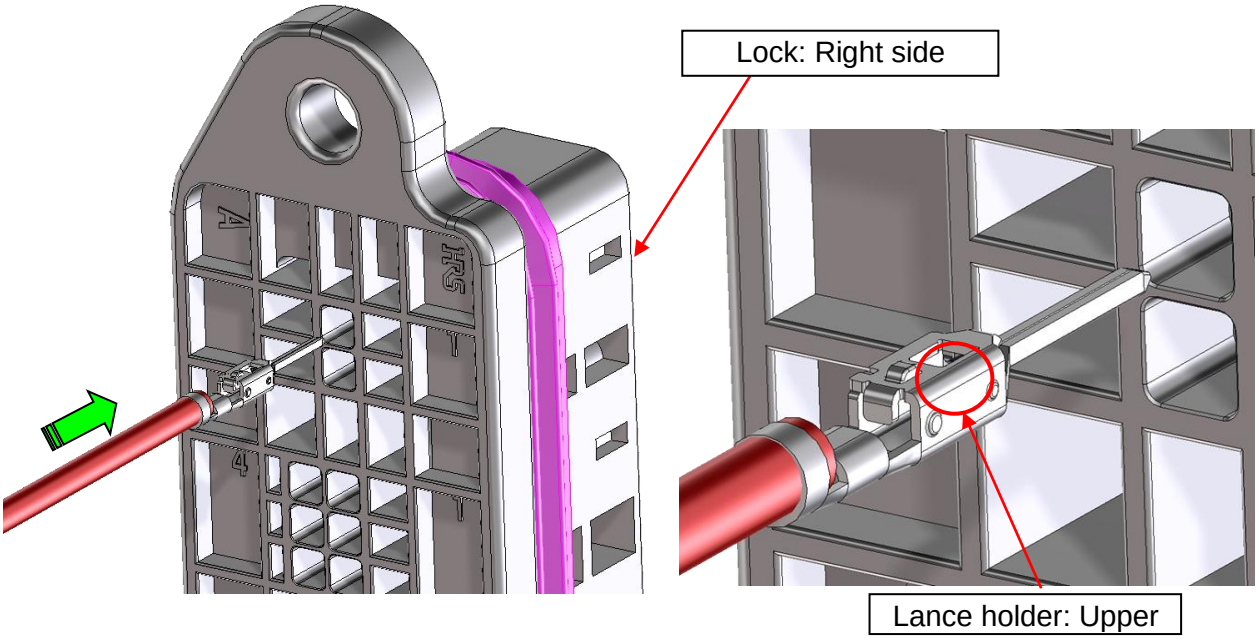


Figure 3-3-7. Terminal orientation (DF62WP)

2) Insert

Insert the crimping terminal by holding the wire in the direction indicated by the arrow.

**[Precautions]**

To maintain performance reliability (Contact performance, waterproof performance, etc.), insert the crimping terminal straight.

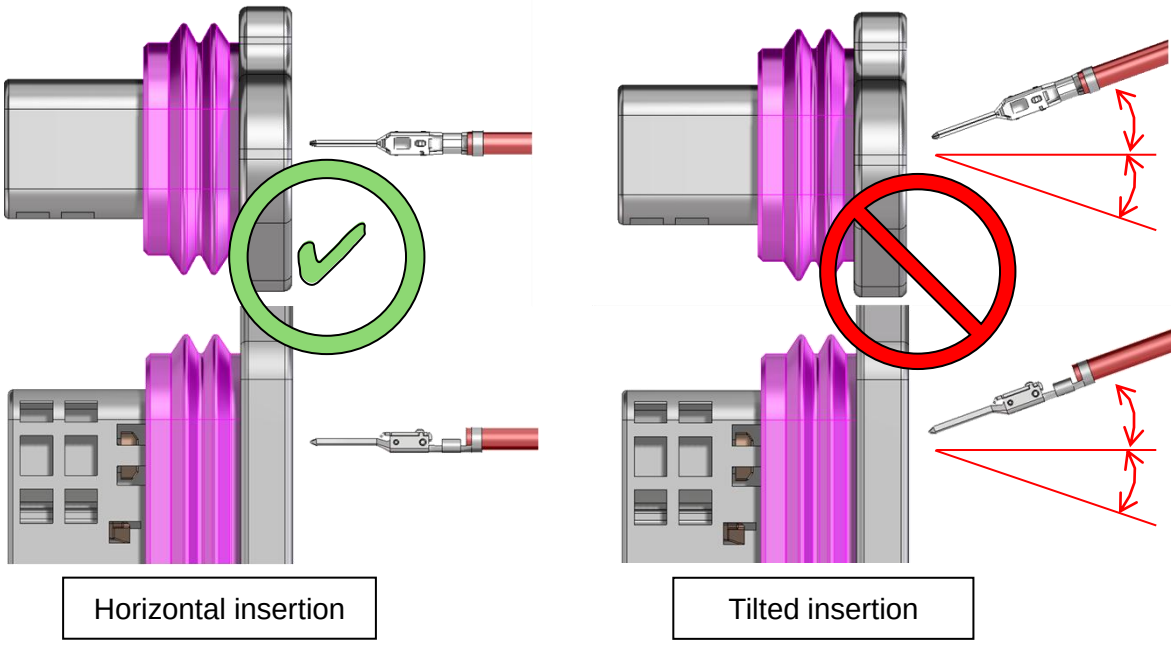


Figure 3-3-8. Prohibition of diagonal insertion (DF62WP)

**[Notes]**

Do not mistake the terminal hole. (Insert the terminal in the direction of arrows below.)

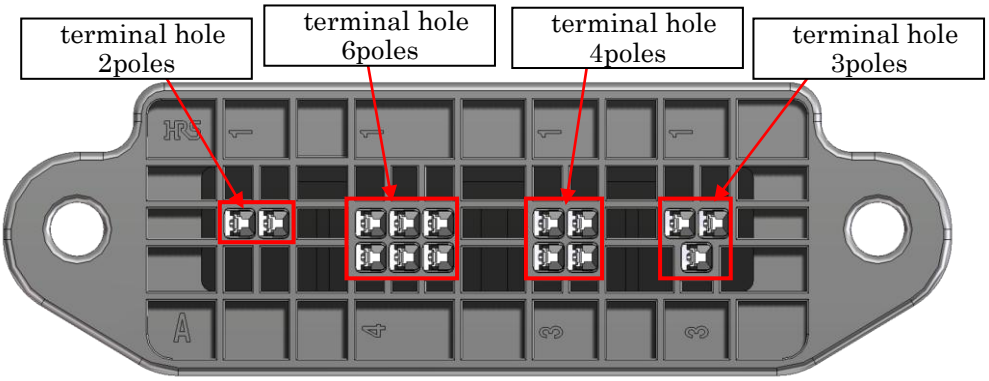


Figure 3-3-9. Terminal hole position (DF62WP)

3) Insert Complete ⚠6

Check that the lance of a crimping socket has been caught at the lance holder of a crimped terminal.

(Same as **3-3-1. DF62W#- * Insert method of S-2.2C and DF62W#- * Insert method of EP-2.2C** 3) Insertion complete.)

[Method 1]

Make sure that the crimping terminal cannot be removed by lightly pulling the wire.

[Method 2]

Visually check the lance section. The mold lance section is hidden by the crimping terminal. Make sure that the. (See Figure 3-3 -6)

Apr.1.2024 Copyright 2024 HIROSE ELECTRIC CO., LTD. All Rights Reserved.

## 3-4. Electrical inspection ⚠6

When performing electrical inspection due to connector connection, insert or remove the connector according to the insertion/removal procedure manual (ATAD-H0761).

**[Precautions]**

・Do not insert anything other than a compatible mating partner as it may cause terminal deformation or contact failure.

・Number of times of fitting guarantee Use after insertion/removal is not guaranteed.

・Please check the inspection process in case of significant plating shaving or missing terminals. There is a possibility that an insertion/removal operation may have been carried out to put a load on the contacts or the wires.

## 3.5.Repair of crimp terminal

To remove crimped terminals that have been inserted, pull the cable using the dedicated. Removing jig (DF62W/RE-MD) while pushing up on the crimping socket lance.

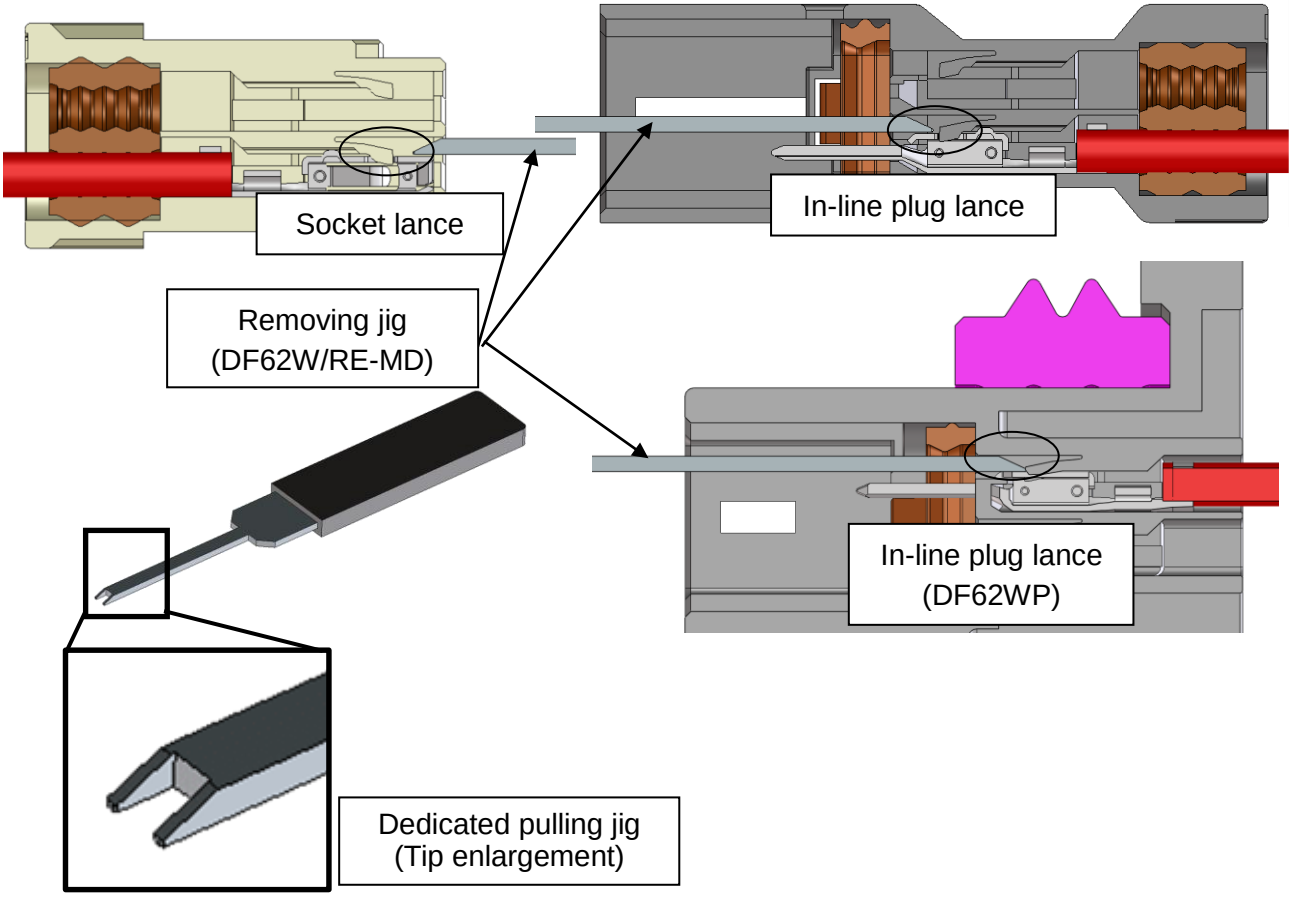


Figure 3-5-1. Schematic diagram

**[Precautions]**

Using crimping socket after repair could induce decrease of lance strength and / or wire seal damage. Use new socket to avoid such failures.

Apr.1.2024 Copyright 2024 HIROSE ELECTRIC CO., LTD. All Rights Reserved.

**1) Prepare for repair**

Insert the removing jig along the lance of crimping socket.
(Check the appearance with the hand lens.)

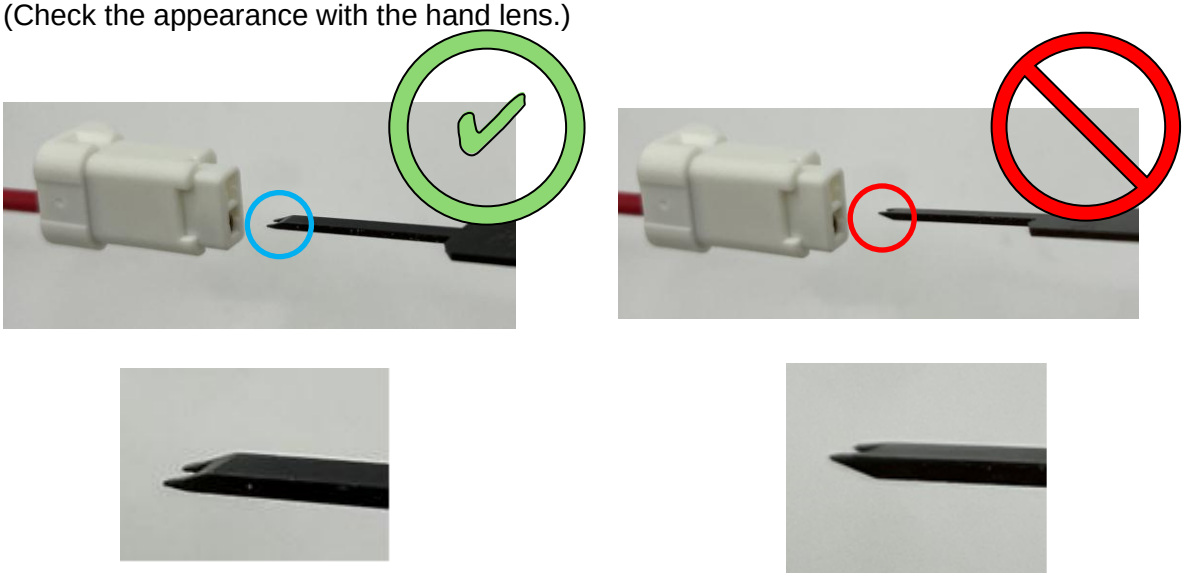

Figure 3-5-2. Drawing jig insertion direction 6

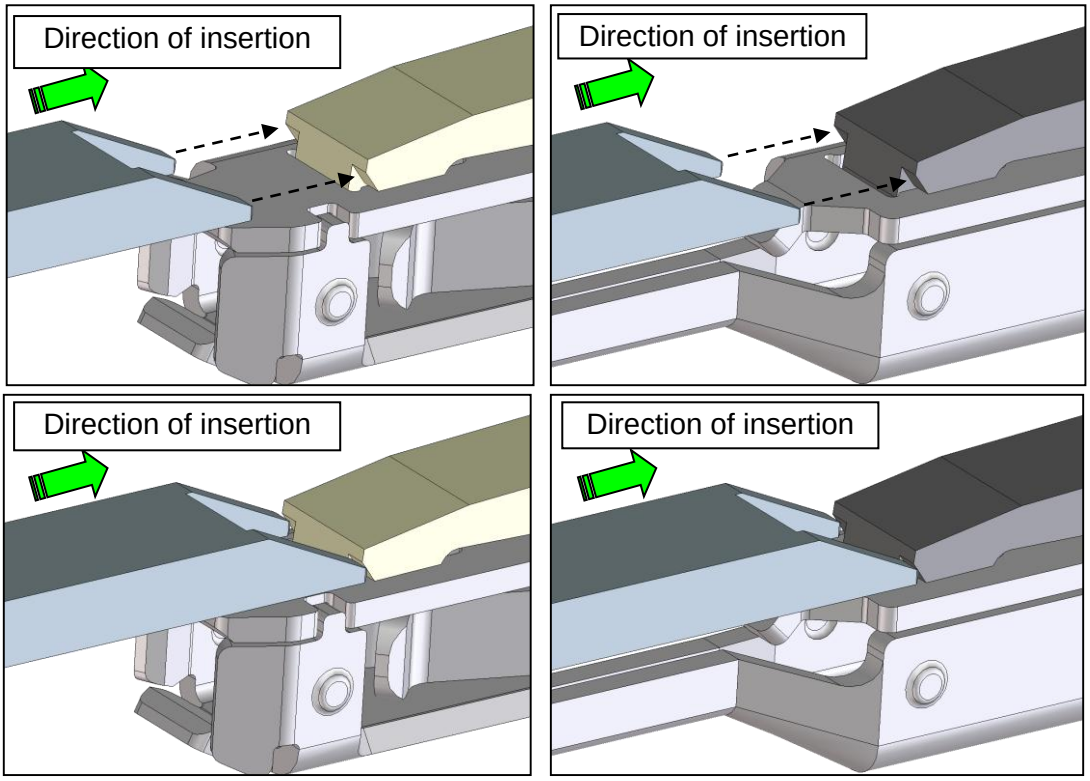


Figure 3-5-3. Drawing jig insertion

Apr.1.2024 Copyright 2024 HIROSE ELECTRIC CO., LTD. All Rights Reserved.

**2)Crimp terminal drawing**

Additionally insert the removing jig to push up the socket lance.
Hold the lance's position and pull the cable.
(Use a magnifying glass to check.)

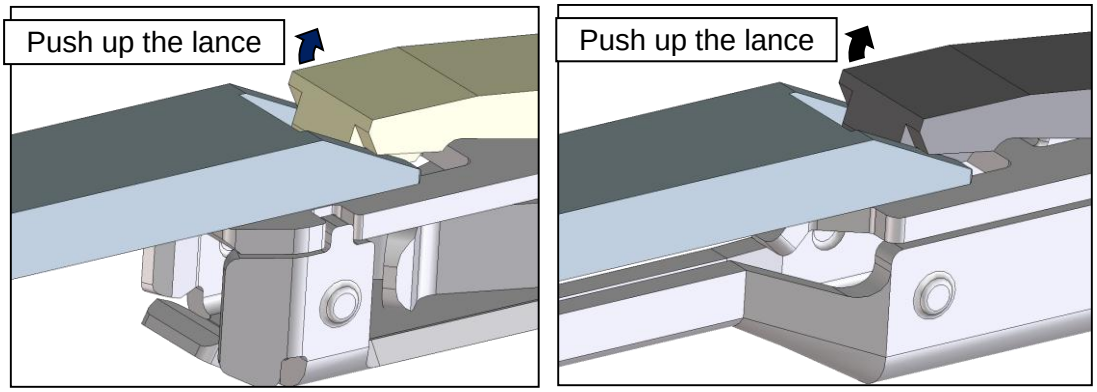


Figure 3-5-4. Crimp terminal pull-out

**3-6.Waterproof pin insertion**

Compatible Series: DF62W (Z)- * S-2.2C, DF62W (Z)- * EP-2.2C

Insert the waterproof pin into the terminal hole of the crimping case.

1) Insert

If you use waterproof pins, insert them into each hole with designated terminal numbers.
(Insertion direction is shown by arrows in the figure below.)

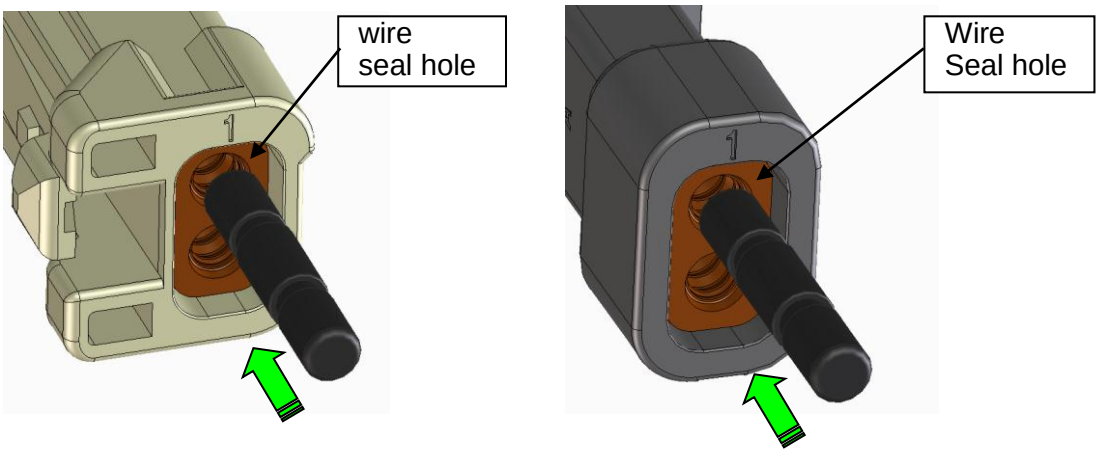


Figure 3-6-1. Inserting waterproof pin

Apr.1.2024 Copyright 2024 HIROSE ELECTRIC CO., LTD. All Rights Reserved.

・The waterproof pin can be inserted from both directions.

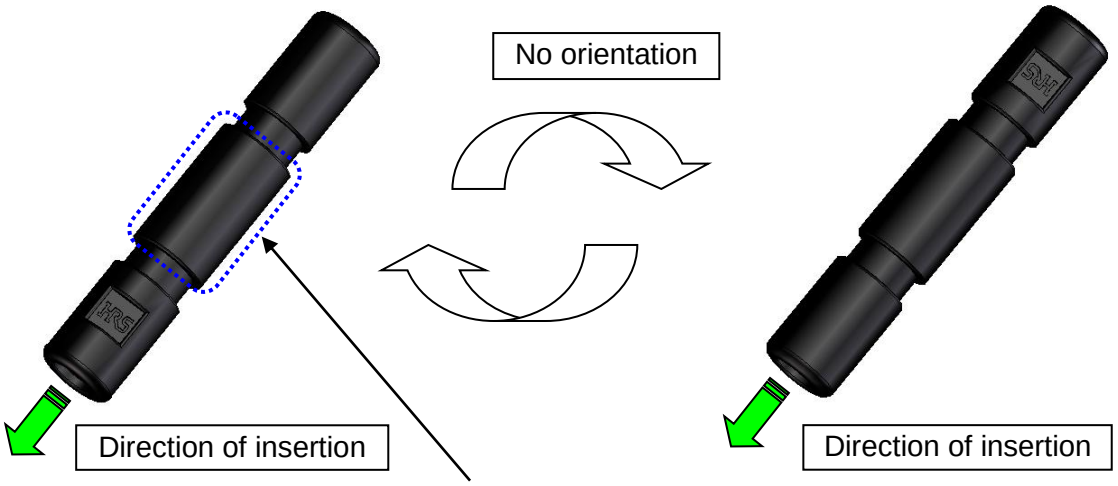


This surface is waterproof , so take care not to damage it.

Figure 3-6-2. Orientation of waterproof pins

**[Precautions]**

To maintain performance reliability (Contact performance, waterproof performance, etc.), insert the waterproof pin straight into the connector.

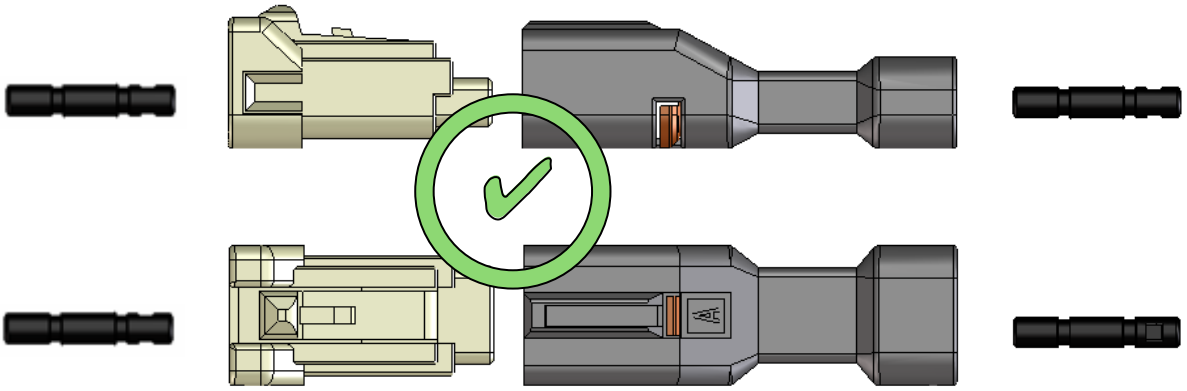

Horizontal insertion

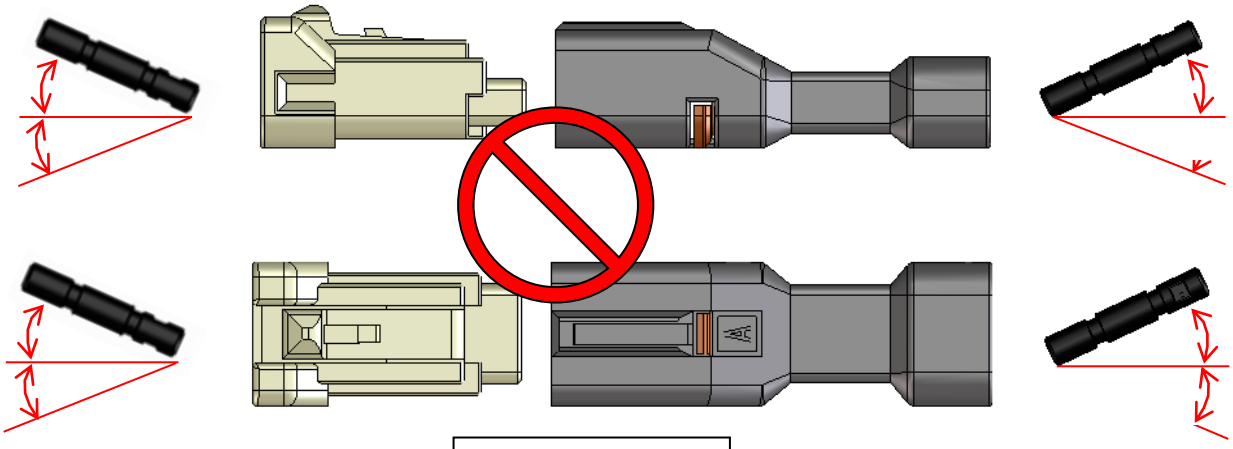

Angled insertion

Figure 3-6-3. Prohibition of diagonal insertion of waterproof



Apr.1.2024 Copyright 2024 HIROSE ELECTRIC CO., LTD. All Rights Reserved.

**3)Completion of insertion**

Insert the waterproof pin until it lightly touches the crimping case.

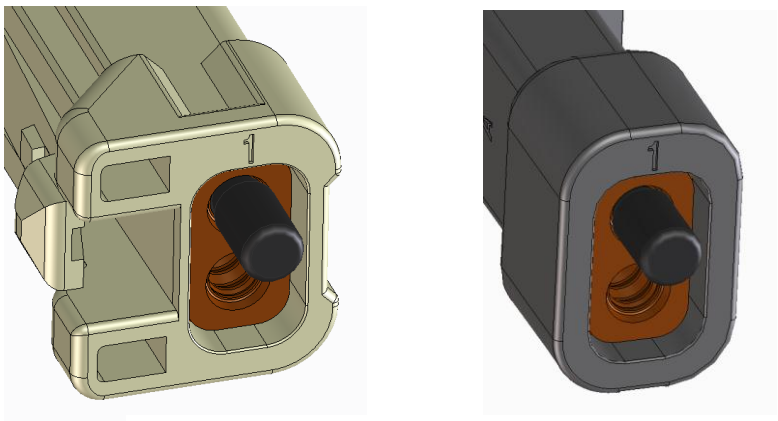

Figure 3-6-4.
After inserting the waterproof pin

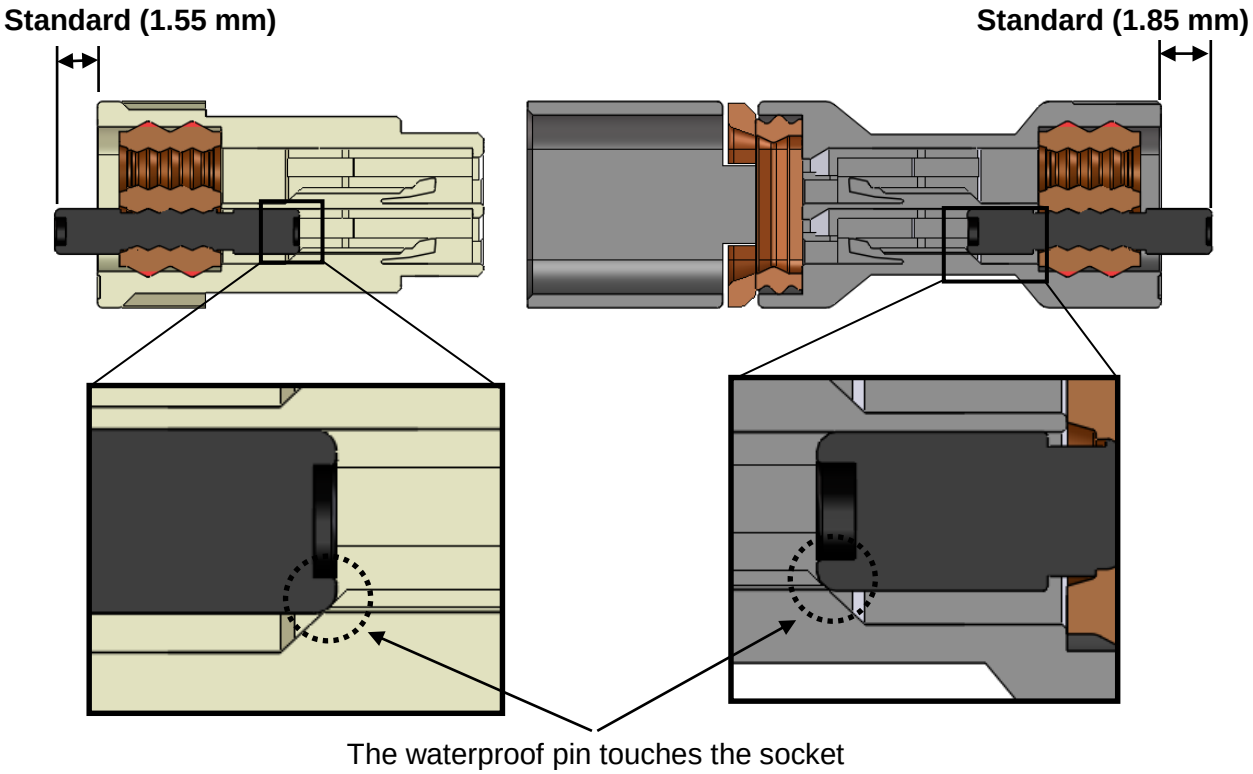


Figure 3-6-5. Depth of waterproof pin insertion pin

**[Precautions]**

- When reinserting the waterproof pin in the middle of insertion, remove the waterproof pin with tweezers or the like in the condition that the wire seal is not removed.
- In the unlikely event that the wire seal comes off, refer to the product drawing and insert it again, paying attention to its orientation.

Apr.1.2024 Copyright 2024 HIROSE ELECTRIC CO., LTD. All Rights Reserved.

# 4.DF62WP Panel Installation Procedure

## 4-1. Mounting panel

### 4-1-1. Panel insertion

Align the connector using the screw holes on the panel side as a guide.
Insert the connector as far as it will go while maintaining the aligned position.
* The shape of the panel is an example.

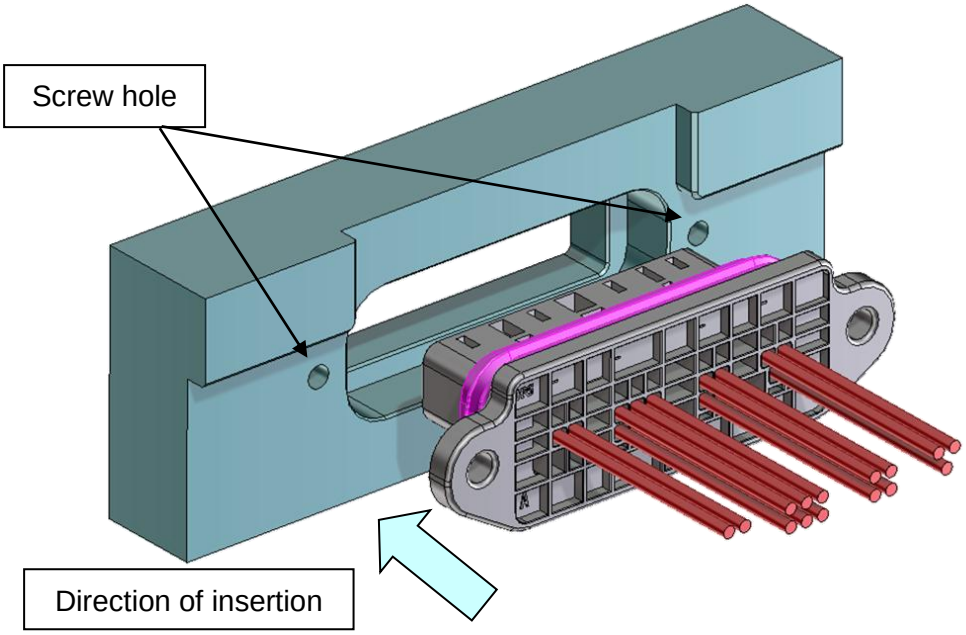


Figure 4-1-1. Insertion into panel

If the panel has a shape to prevent reverse mounting, align the orientation with the protrusion shape before inserting.

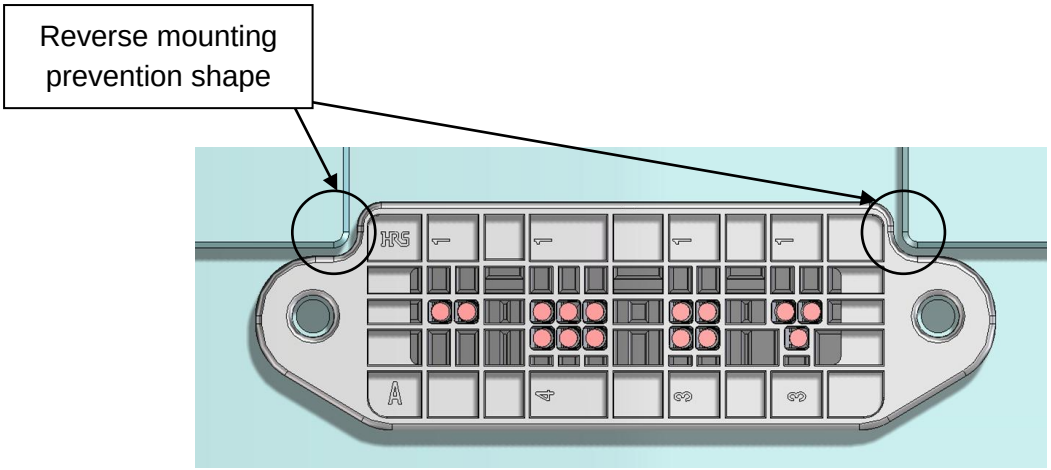


Figure 4-1-2. Reverse mounting prevention shape

Apr.1.2024 Copyright 2024 HIROSE ELECTRIC CO., LTD. All Rights Reserved.

Since otherwise the connector may be damaged or the waterproof seal may be broken, insert the connector straight into the panel and attach it.

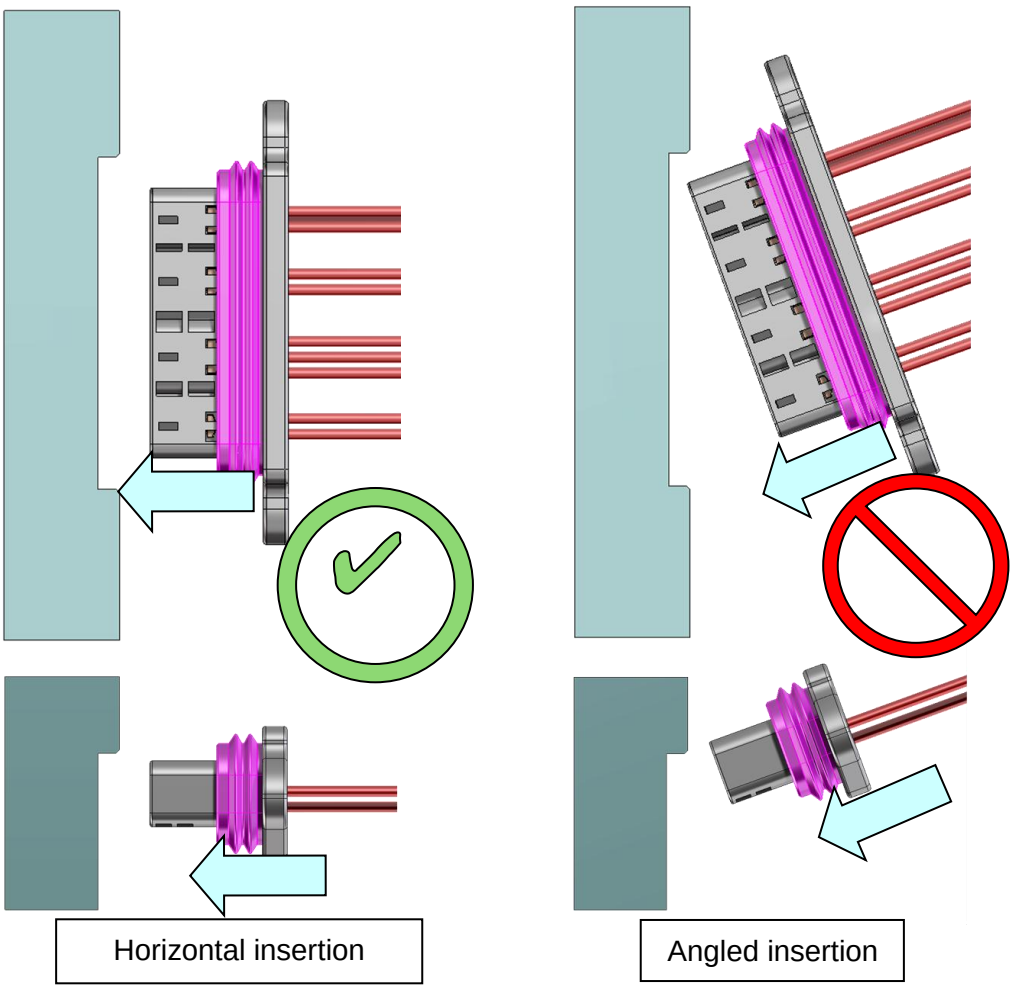


Figure 4-1-3. Prohibition of diagonal

**4-1-2. Repair of waterproof seal (DF62WP series)**

The waterproof seal may shift by inserting or removing the connector from the panel. In that case, please use it after returning the waterproof seal to the normal position.

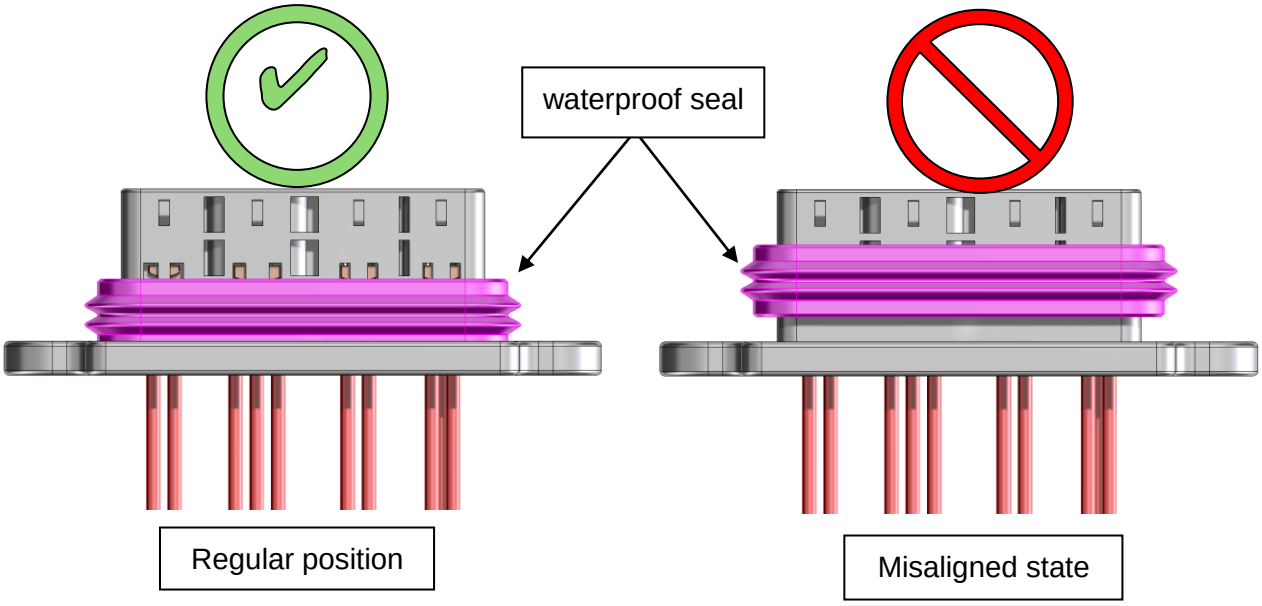


Figure 4-1-4. Repairing Waterproof Seal



Apr.1.2024 Copyright 2024 HIROSE ELECTRIC CO., LTD. All Rights Reserved.

**4-1-3. Fixed with screws**

Install the screws with the connector fully inserted.

Use the screw shown in the drawing for the fixing screw.

At this time, do not fix the screws when the connector is biased in either the vertical or horizontal direction or when an excessive load is applied.

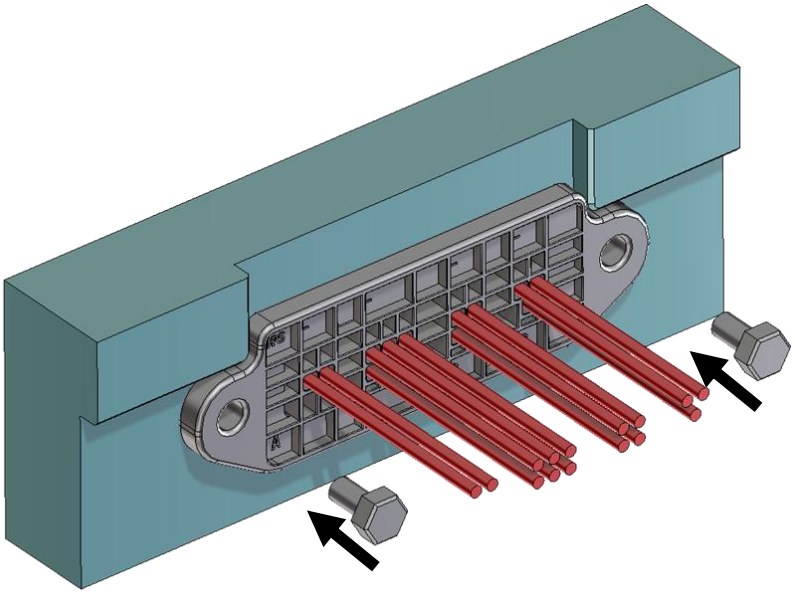

Figure 4-1-5. Screw fixing

**4-2.Removal from panel**

**4-2-1.Removing screws**

Remove screws.

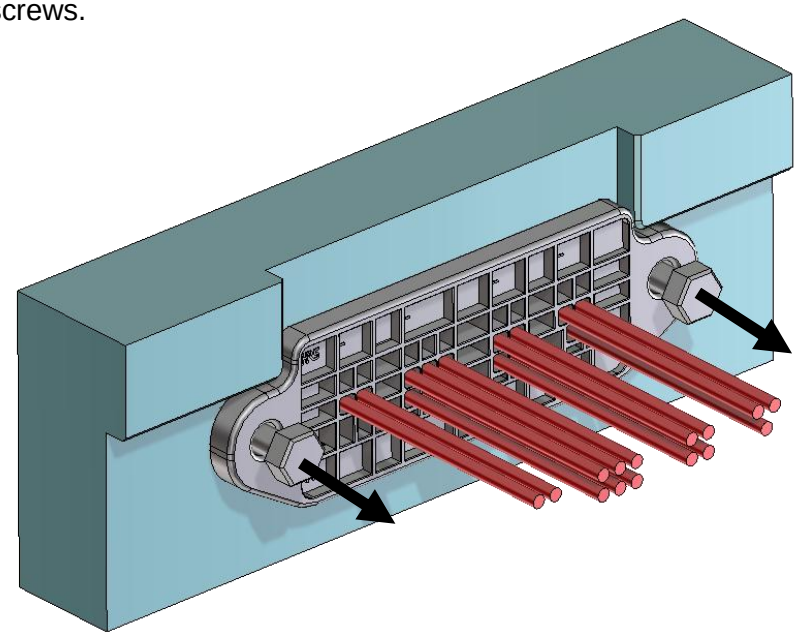

Figure 4-2-1. Removing Screw

Apr.1.2024 Copyright 2024 HIROSE ELECTRIC CO., LTD. All Rights Reserved.

## 4-2-2. Removing the connector

Remove the connector from the panel. At this time, push the connector mating surface side to remove it. Do not pull the cable to remove it as it may cause the terminal to come off.

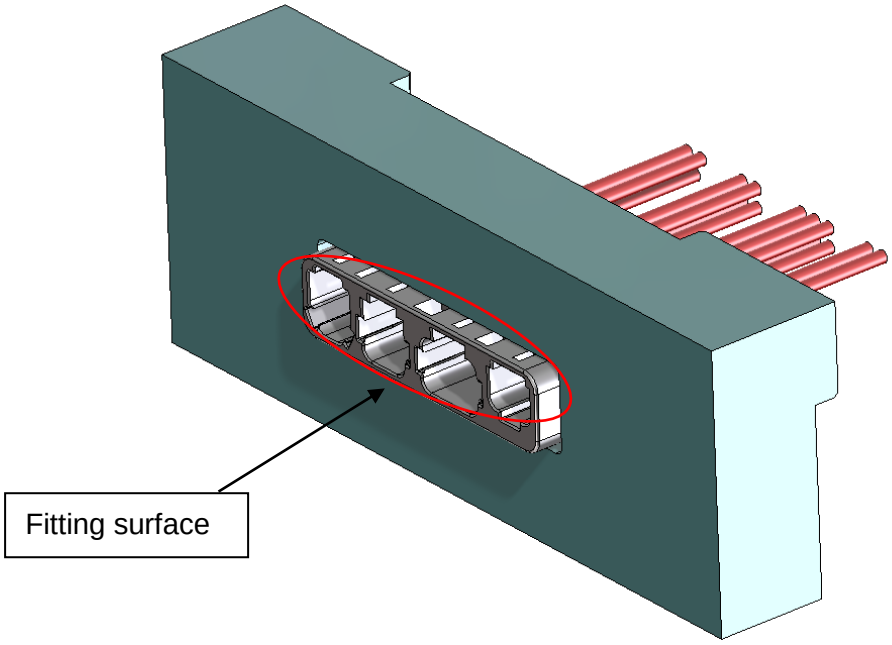


Figure 4-2-2. Remove from the panel

Apr.1.2024 Copyright 2024 HIROSE ELECTRIC CO., LTD. All Rights Reserved.

## 5. Precautions (Handling of harness products)

*Packing and storage
To pack or store assemblies, make sure overlapped connectors will not apply extreme load to the lock section.
If load is applied to the lock section under high temperature and humidity for a long period of time, the lock section will be deformed which could lead poor fitting.
*Excessive external force applied to connectors could cause failure or damage. Therefore, avoid forced insertion or removal, dropping impact, cable wiring (pull, twist) and such.
(Reference value)
Breaking strength of lock is approx. 30 N when connector is pulled in straight direction.
Please avoid excessive force is applied to the connector.
Retention force is DF62: about 7 N/pin, DF62WZ: about 24 N/pin.
. Please avoid excessive force is applied to particular cable.

### ●Cable bending

When bending the cable, provide a straight part from the end face of the connector as shown in the figure below and bend it.
(It depends on the flexibility of the cable, but please bend it at the position of 30 mm as a guide.)
Do not bend sharply from the end face of the connector or stretch the base of the cable because it will put a load on the terminal contact and crimping parts and cause contact and waterproofing failures.

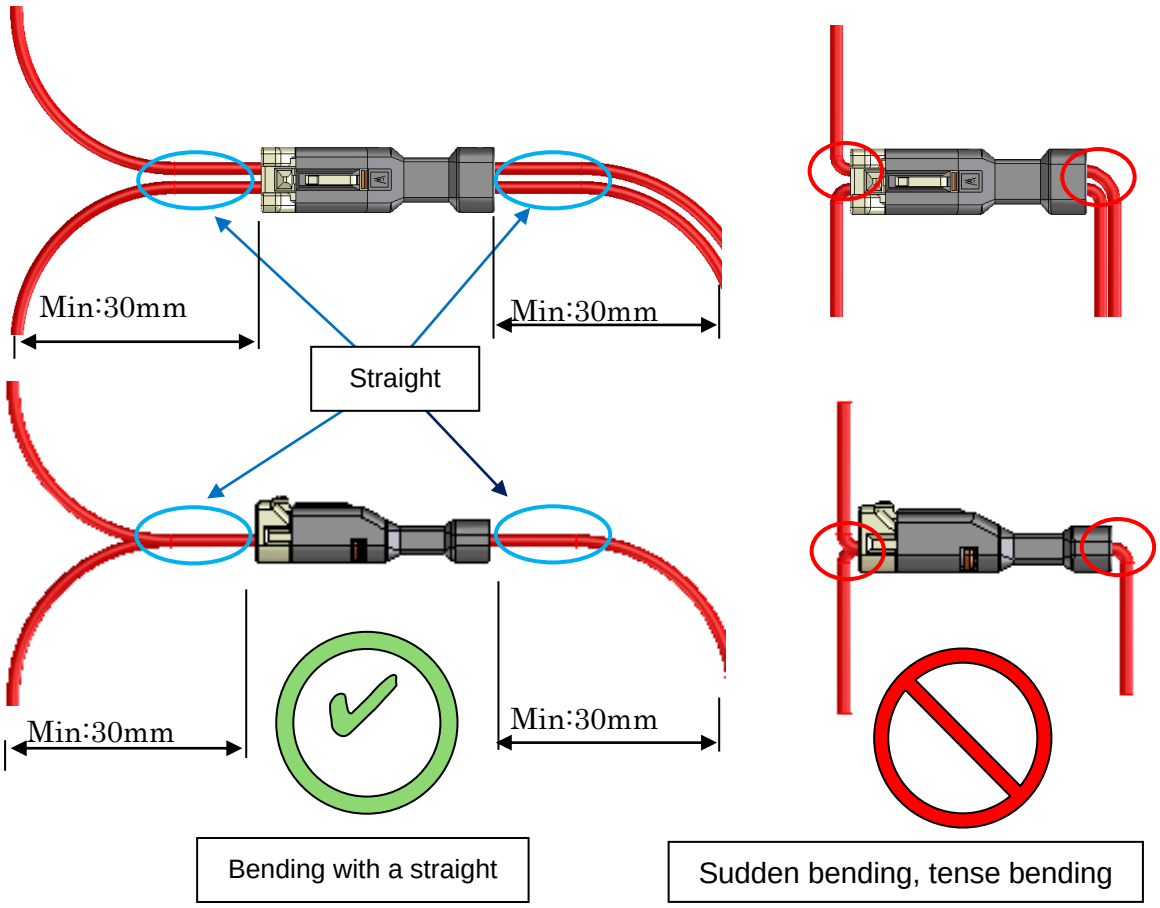


Figure 5-3. Cable bending

Apr.1.2024 Copyright 2024 HIROSE ELECTRIC CO., LTD. All Rights Reserved.

Apr.1.2024 Copyright 2024 HIROSE ELECTRIC CO., LTD. All Rights Reserved.

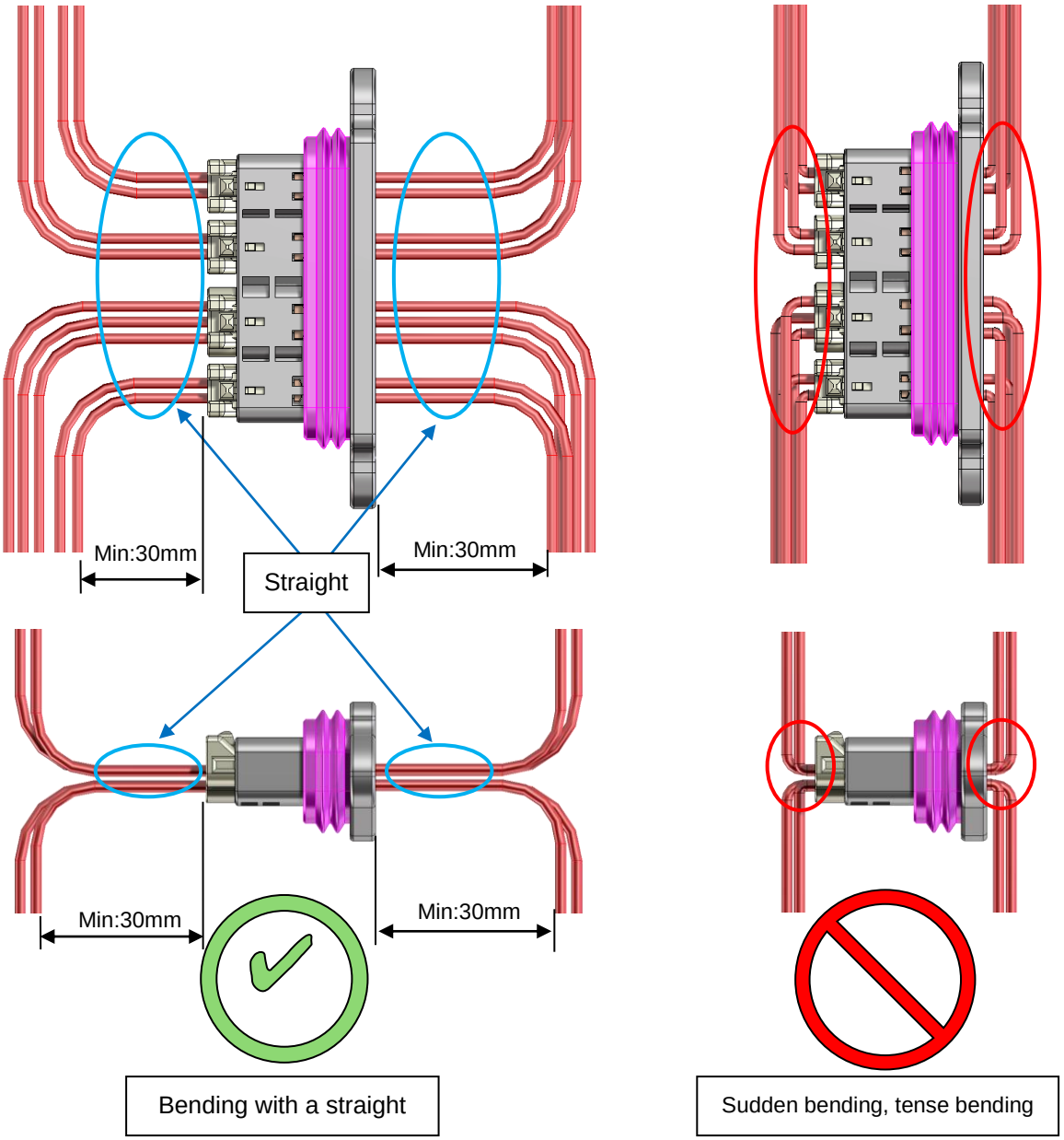


Figure 5-4. Cable bending (DF62WP)

## ●Cable bundling

When bundling cables, prepare a part that is straight from the end face of the connector as shown in the figure below, and tie it at least 30 mm away from the end face of the connector. Do not bind near the end face of the connector because it will put a load on the terminal contact part and the terminal crimping part and cause contact failure and waterproof failure.

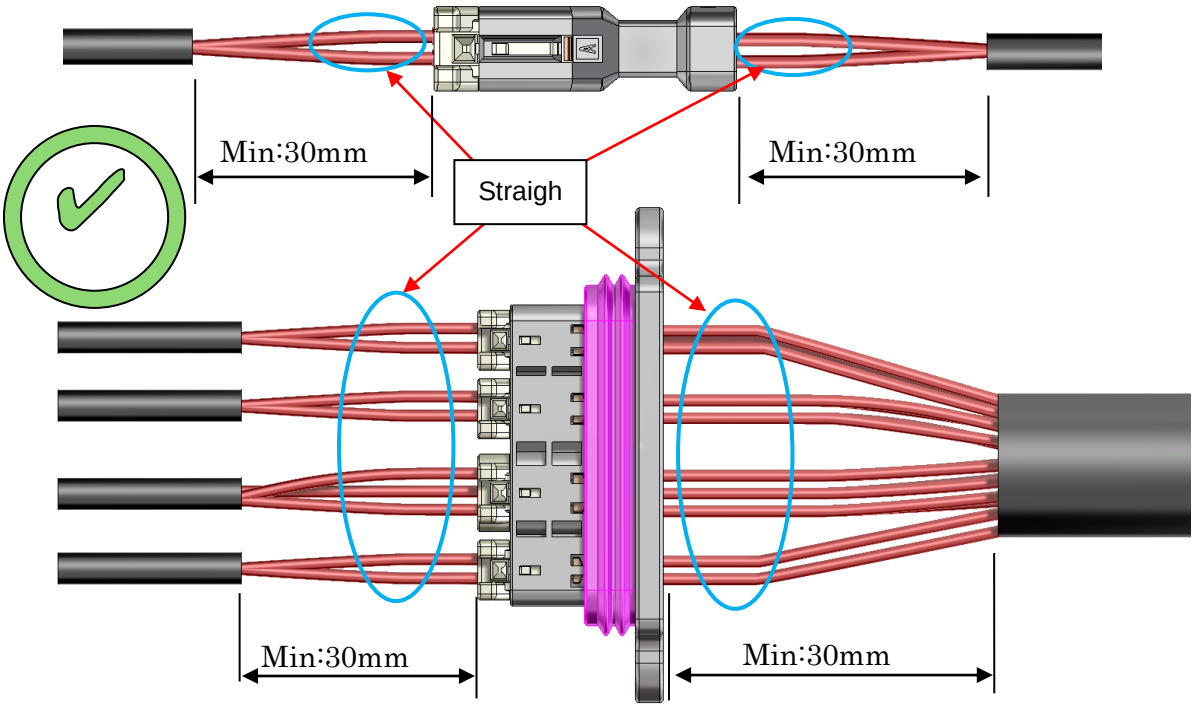


Bunding with a straight

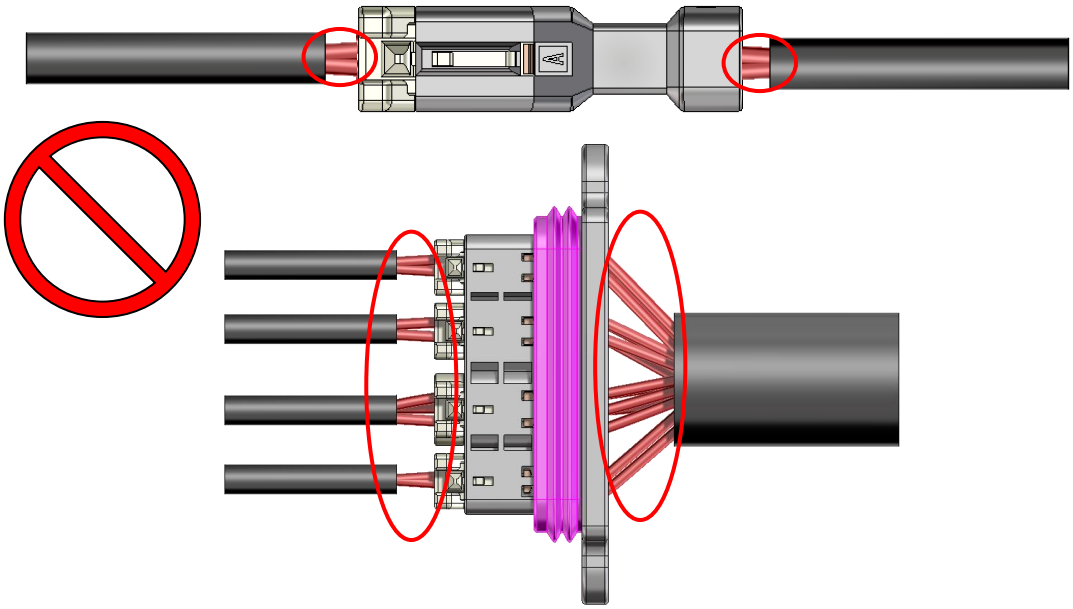

Bundling near the end face

Figure 5-1. Cable bundling

Apr.1.2024 Copyright 2024 HIROSE ELECTRIC CO., LTD. All Rights Reserved.

Please crimp with the terminal direction aligned.

If the terminal direction is not aligned, it is necessary to rotate the terminal and insert into the crimping case. It could cause stress, loosening the contact.

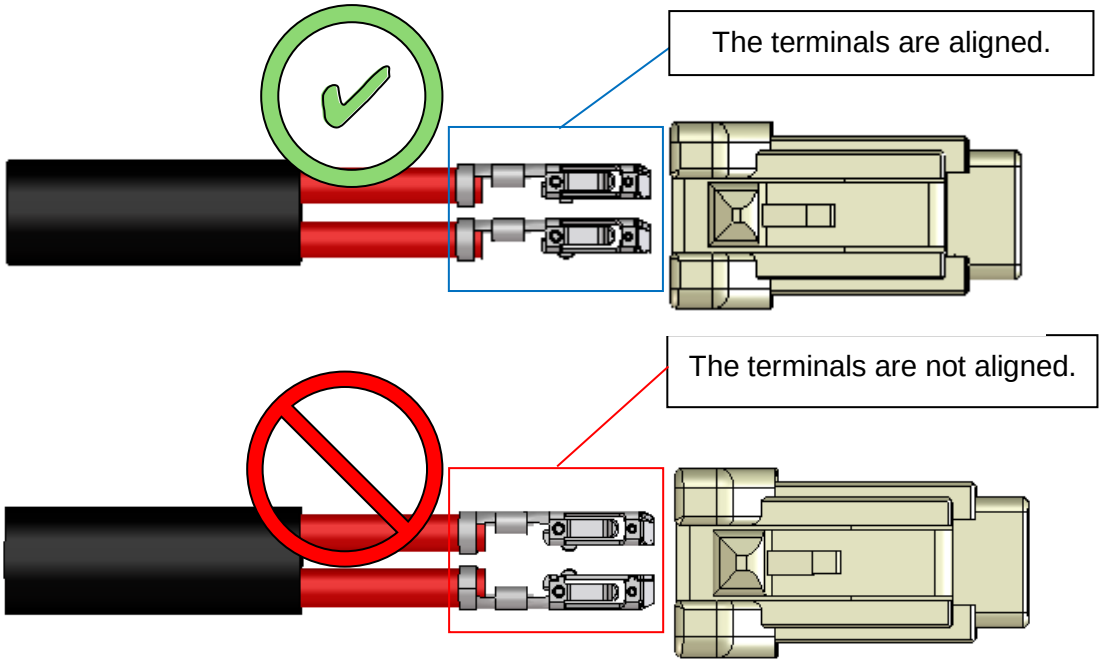


Figure 5-2. Terminal binding direction

△6 ・This harness procedure is not included in the Substrate-to-Wire Connector Guidelines (ATAD-H1023-00).
Items such as product selection guidelines and product handling methods are described, so please check them together before using the connector.

Apr.1.2024 Copyright 2024 HIROSE ELECTRIC CO., LTD. All Rights Reserved.

## 6. In times of trouble (Q & A) △6

Please review the following items before contacting us.
If applicable, please review the details and take appropriate action.
If the same problem still occurs, contact your our company representative.

| Occurrence phenomenon | What you need to check | detailed description |
|---|---|---|
| When the crimping terminal fell out. | ●Did you do any work such as pulling, pulling or twisting the wires?<br>●Didn't you tie up the wires so that they were strung? | Table.6-1 No1 |
| | ●Was the crimped socket used after terminal repair? | Table.6-1 No2 |
| | ●Has the terminal been deformed? | Table.6-1 No3 |
| | ●Are the connectors in the wrong orientation?<br>●Have you checked the completion of insertion? | Table.6-1 No4 |
| When it is difficult to insert the crimping terminal | ●Are the crimping terminal and crimping case facing the wrong way?<br>Is the crimping terminal rotating? | Table.6-2 No1 |
| | ●Is the crimping terminal inserted diagonally? | Table.6-2 No2 |
| | ●Is the crimping terminal deformed? | Table.6-2 No3 |
| When it is difficult to repair the crimping terminal | ●Do you use a special pulling jig? | Table.6-3 No1 |
| | ●Is the jig inserted in the wrong direction? | Table.6-3 No2 |

Apr.1.2024 Copyright 2024 HIROSE ELECTRIC CO., LTD. All Rights Reserved.

## 6-1. Crimp terminal is removed.

Table 6-1. Countermeasure (crimping terminal fell out)

| No. | Detailed explanation | Countermeasure method |
|---|---|---|
| 1 | 1)If an excessive load is applied to the wire, a similar load is applied to the mold lance section, the mold lance may be scraped, and the crimping terminal may fall out.<br><br>2) If an excessive load is applied to the mold lance section while the wire is jammed, the mold lance may be scraped and the crimping terminal may come off.<br> 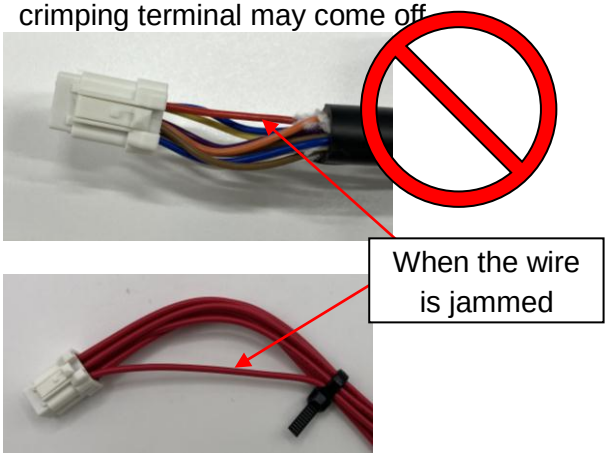 <br><br>When the wire is jammed | 1)Take care not to pull, pull, twist, etc. the wire excessively. (**5. Precautions)**<br><br>2)When tying wires, refer to the precautions for tying wires in **5.precautions.** |
| | When you perform the above operation, mold lance shaving as shown in the picture will occur.<br> 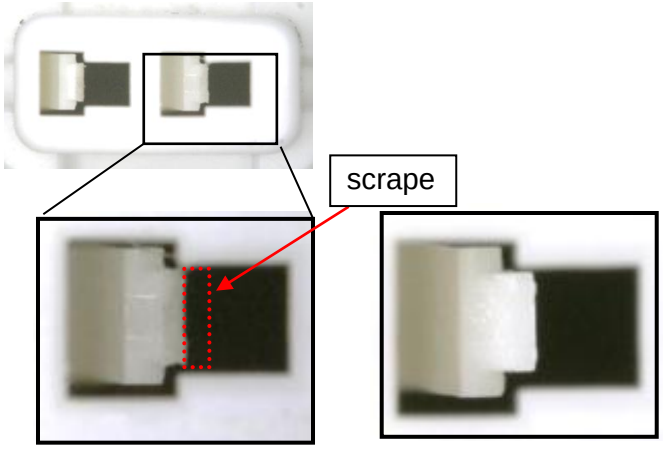 <br><br>Mold lance scrape Mold lance (initial) | |

Apr.1.2024 Copyright 2024 HIROSE ELECTRIC CO., LTD. All Rights Reserved.

Table 6-1. Countermeasure (crimping terminal fell out) (continued)

| No | Detailed explanation | Countermeasure method |
|---|---|---|
| 2 | When the socket lance is deformed during terminal repair, the lance strength may be reduced and the crimping terminals may be released. | If the crimping case has been repaired, use a new crimping case instead of reusing it. **(3.5.Repair of Crimp Terminal)** |
| | This is a modified example of mold lance when the above work is performed. 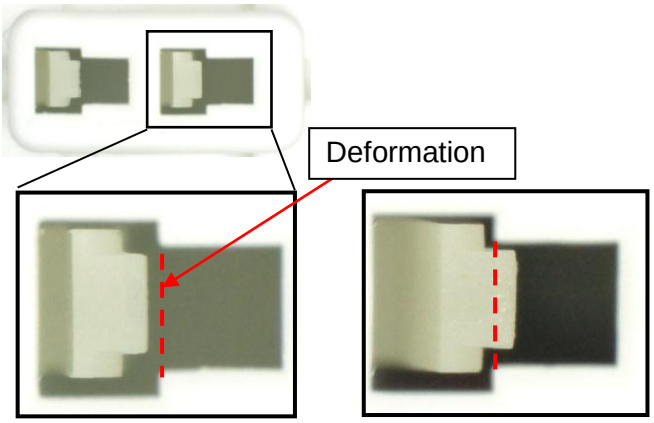  Mold Lance Deformation　Mold Lance (initial) | |

| No | Detailed Description | Countermeasure Method |
|---|---|---|
| 3 | If the crimped terminals are deformed, the terminal tips may collide with each other and the crimped terminals may fall out when the connectors are fused. 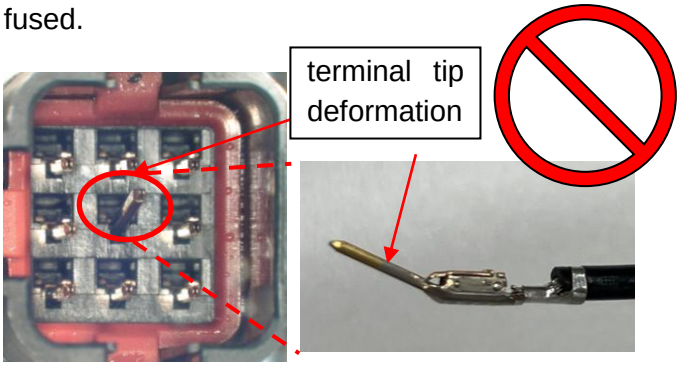  Crimping terminal insertion state　Crimping terminal | ・Check whether crimping is performed correctly. **(3.2.Crimping)** ・Check whether there is any process that deforms the crimping terminal, and do not deform it. |

Apr.1.2024 Copyright 2024 HIROSE ELECTRIC CO., LTD. All Rights Reserved.

Table 6-1. Countermeasure (crimping terminal fell out) (continued)

| No | Detailed explanation | Countermeasure method |
|---|---|---|
| 4 | When the crimping terminal is in the semi-inserted state, the lance strength decreases.<br>The crimping terminal may fall out.<br><br>1) Different orientation of the terminal when inserting the terminal<br>2) Insufficient confirmation of completion of insertion<br><br> 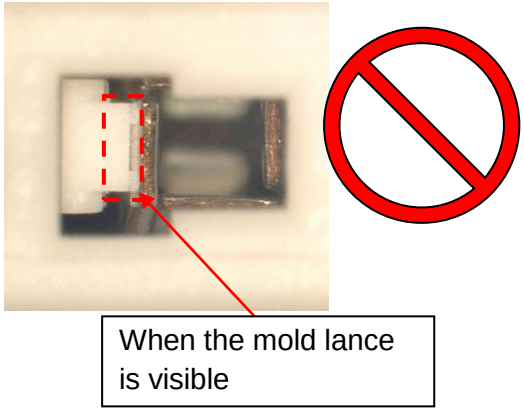 <br>When the mold lance is visible<br>Lance engaged state (semi-inserted) | Refer to **3-3.Insert crimping terminal socket** when inserting the terminal.<br><br>1) Make sure that the terminals are in the correct orientation.<br>2) Confirm completion of insertion. |

## 6-2. Difficulty inserting crimping terminal

Table 6.2. Countermeasure (Hard to insert crimping terminal)

| No | Detailed explanation | Countermeasure method |
|---|---|---|
| 1 | If the direction of the crimping terminal is wrong, the crimping terminal and socket will interfere and cannot be inserted.<br><br> 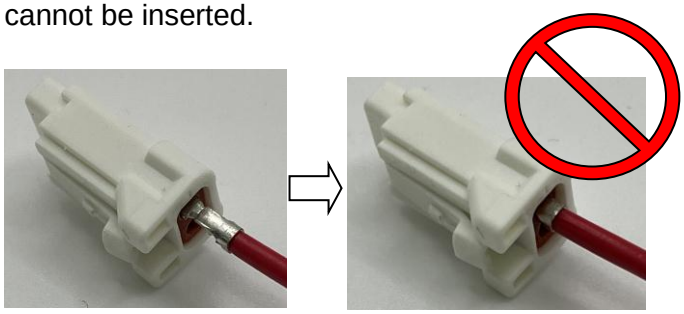 <br>Insert in opposite direction Cannot insert | Insert the terminal referring to the orientation of the terminal in **3-3.Insert crimping terminal socket** |
| 2 | If the crimping terminal is inserted diagonally, the crimping terminal and the wire seal will interfere, making it difficult to insert.<br><br> 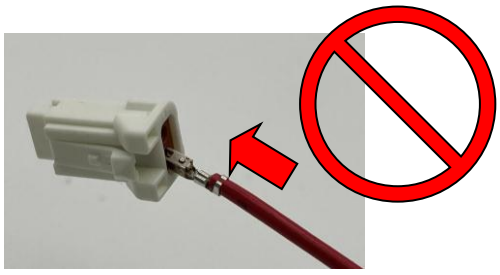 <br>Diagonal insertion | Refer to **3-3.Crimp terminal socket insertion** and insert the straight terminal. |

Apr.1.2024 Copyright 2024 HIROSE ELECTRIC CO., LTD. All Rights Reserved.

Table 6.2. Countermeasure (Difficult to insert crimping terminal) (continued)

| No | Detailed explanation | Countermeasure method |
|---|---|---|
| 3 | When crimping terminal is deformed, the crimping terminal and the socket will interfere, making it difficult to insert.<br> 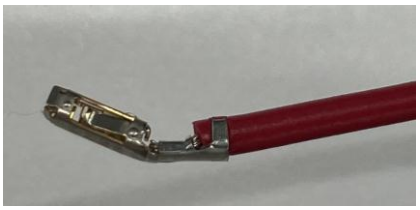 <br>Crimping terminal deformed state | ・Check whether crimping is performed properly.<br>**(3-2.Crimping process)**<br>・Check whether there is any process that deforms the crimping terminal, and do not deform it. |

## 6-3. Difficulty repairing crimping terminal

Table 6-3. Countermeasure (Difficult to repair crimping terminal)

| No | Detailed explanation | Countermeasure method |
|---|---|---|
| 1 | If you are not using the special release jig, the lance cannot be pushed up and the crimping terminal cannot be released correctly. | Use a dedicated plucking tool (DF62 W/RE-MD). |
| 2 | If the jig is inserted in the wrong direction, the lance cannot be pushed up and the crimping terminal cannot be removed.<br> 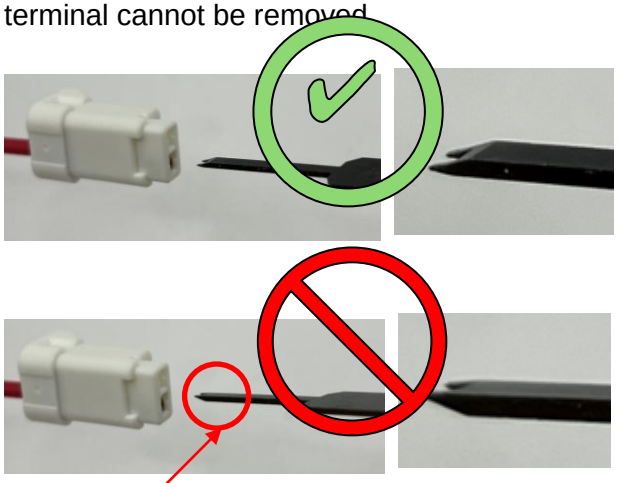 <br><br>Drawing jig insertion direction | Refer to **3.5.Repair of Crimp Terminal** and insert the jig in the correct orientation. |

Apr.1.2024 Copyright 2024 HIROSE ELECTRIC CO., LTD. All Rights Reserved.