Apr.1.2024 Copyright 2024 HIROSE ELECTRIC CO., LTD. All Rights Reserved.
In case of consideration for using Automotive equipment / device which demand high reliability, kindly contact our sales window correspondents.

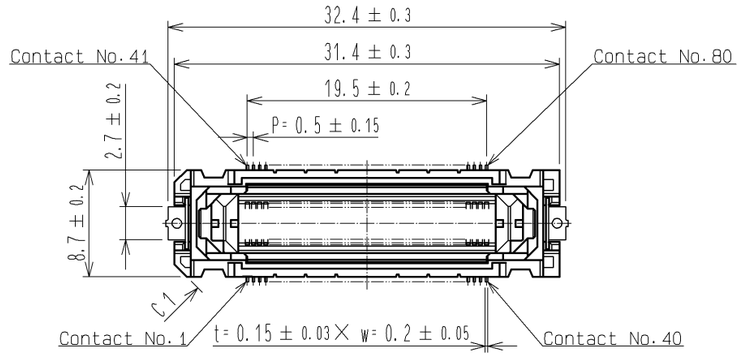

Recommended land pattern dimension of PCB

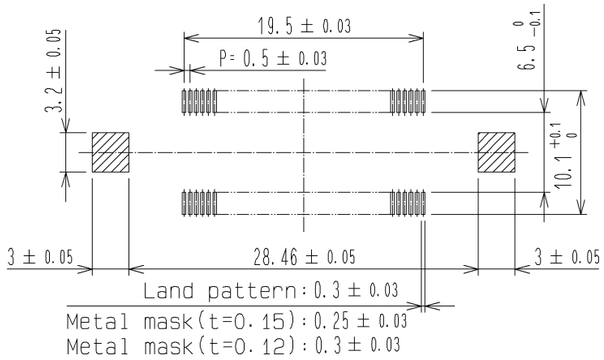

3 FLOATING RANGE

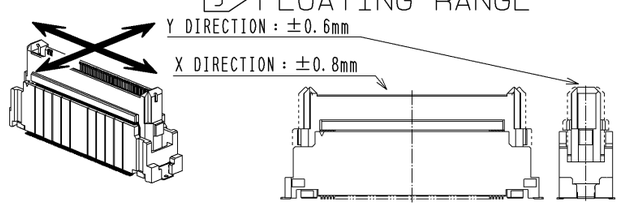

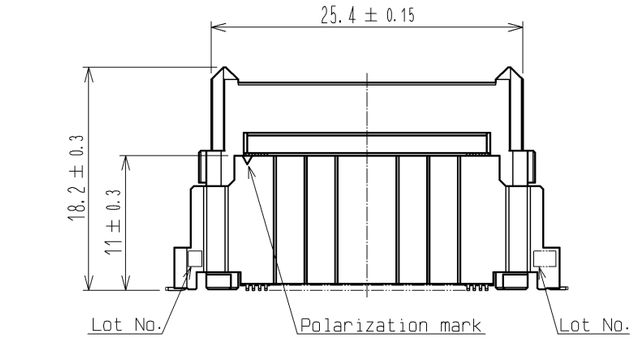

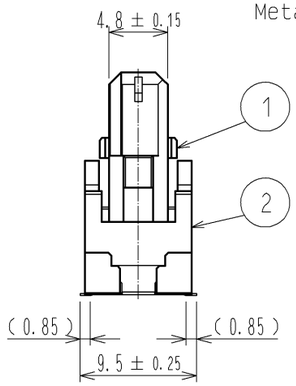

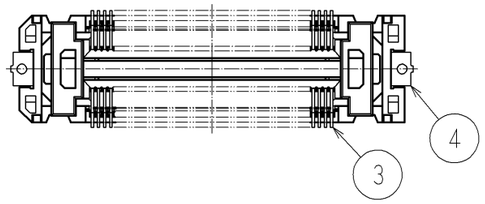

Drawing for mating (No scale)

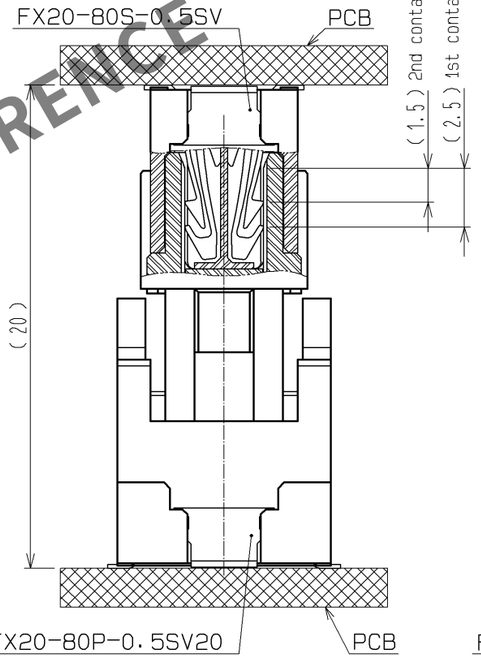

Drawing for mating (No scale)

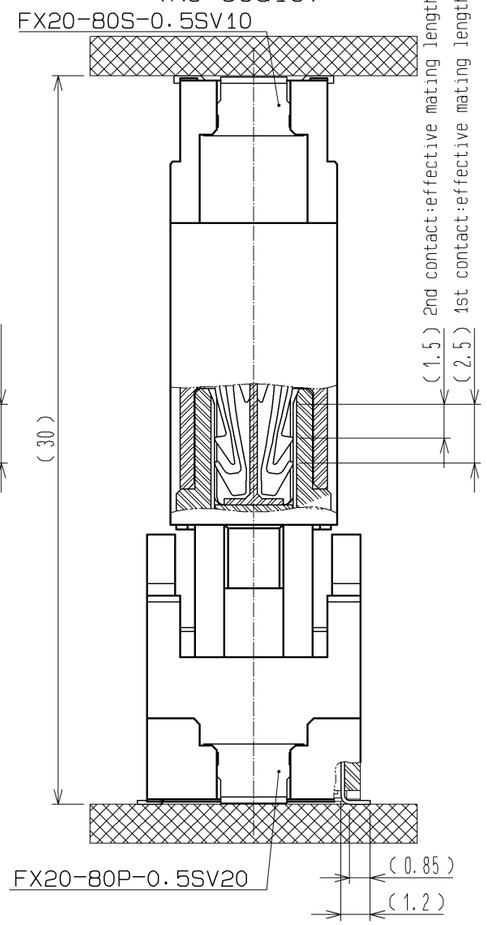

2 Drawing for packing (No scale)

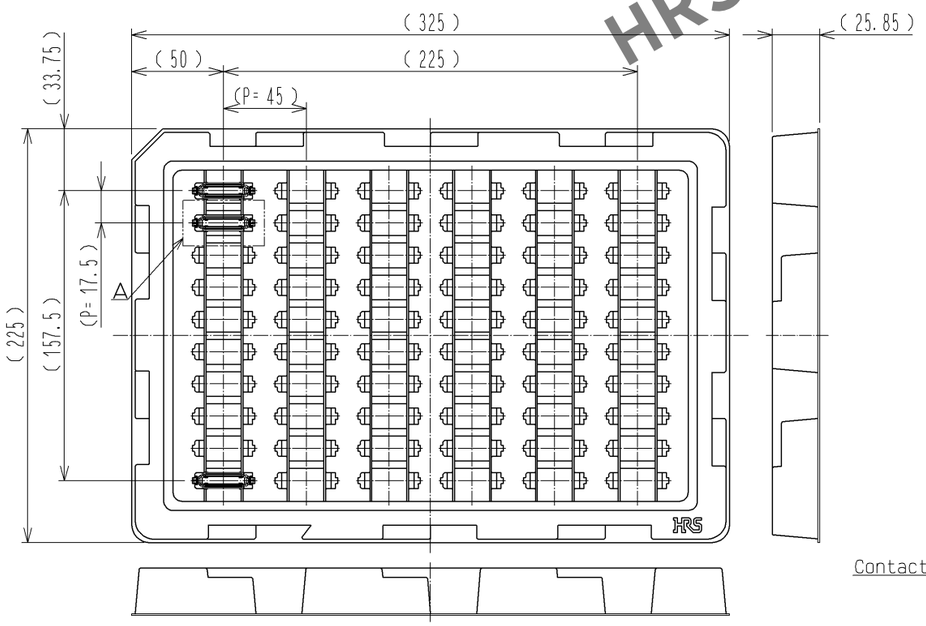

A (1 : 1)

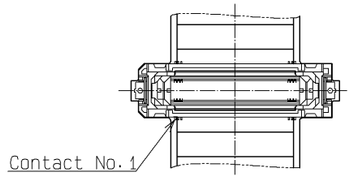

1 Lead CO-Planarity is 0.1mm MAX.
2 This is packaged in tray. (60pcs/tray)
3 Floating range of this connector is ±0.8mm MAX in the X direction and ±0.6mm MAX in the Y direction.
4 Blemish and hit mark can be occured through out the manufacturing process which doesn't affect quality level.
5 Please note that excessive wrenching force could damage this connector.
Please refer to the guideline for detailed regulations of the mating method.
6 The dimensions in parentheses are for references.

NO.	MATERIAL	FINISH , REMARKS
2	POLYAMIDE	BLACK UL94V-0
1	POLYAMIDE	BLACK UL94V-0

NO.	MATERIAL	FINISH , REMARKS
4	BRASS	TIN-PLATING 1μm
3	COPPER ALLOY	CONTACT AREA:GOLD 0.1μm LEAD AREA :GOLD 0.03μm UNDER PLATING:NICKEL 1μm

UNITS	SCALE	COUNT	DESCRIPTION OF REVISIONS	DESIGNED	CHECKED	DATE
mm	2 : 1					

HIROSE ELECTRIC CO., LTD.

APPROVED	: HS. OKAWA	13. 10. 07	DRAWING NO.	EDC3-336327-00
CHECKED	: KI. HIROKAWA	13. 10. 07	PART NO.	FX20-80P-0.5SV20
DESIGNED	: TS. OONO	13. 10. 07	CODE NO.	CL570-1009-2-00
DRAWN	: TS. OONO	13. 10. 07		1/1

HRS DRAWING FOR REFERENCE