1. Scope △1

This document specifies the cable assembly procedures of crimping the crimp contact to the cable (AWG#26 to 32) and inserting the contact to the crimp socket for DF50 Series.

2. Part Number △1

Part No.	Description
DF50-26SCFA(##)	Crimp contact
DF50-2830SCFA(##)	
DF50K-2830SCFA(##)	
DF50-3032SCFA(##)	
DF50S-*DS-1C(##)	Crimp socket

*: Number of position
(##): Peculiar specification number

3. Cable Assembly Procedure

3.1. Cable Stripping △1

Follow the Crimping Quality Standard (ATAD-H0616), and strip the cable jacket.
Make sure that there is no damage on the center conductor of the cable.

3.2. Crimping Process △1

Crimp the contact by using the applicator (AP105-DF50-2630S, AP105-DF50K-2830S, AP105-DF50-3032S). Confirm that the crimp height and configuration meet the crimp condition and Crimping Quality Standard (ATAD-H0616).

3.3. Crimped Contact Insertion to Crimp Socket

Hold the cable of crimped contact and insert to each contact cavity of the crimp socket.
(Insertion direction is as shown below.)

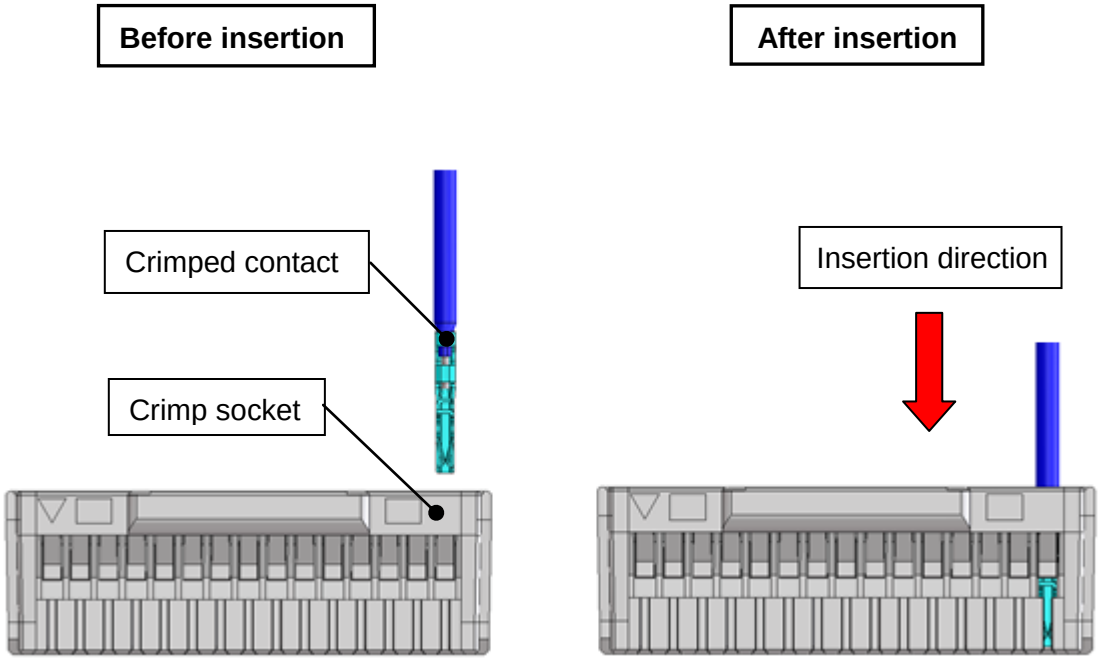

	COUNT	DESCRIPTION OF REVISIONS	DESIGNED	CHECKED	DATE
△1	7	DIS-H-00002157	TS.MIYAKI	TS.FUKUSHIMA	16.10.12

TITLE

DF50 Series Cable Assembly Procedure

HRS HIROSE ELECTRIC CO., LTD.

APPROVED	KI.AKIYAMA	10.09.21
CHECKED	OM.MIYAMOTO	10.09.21
DESIGNED	TT.OHSAKO	10.09.21
WRITTEN	TT.OHSAKO	10.09.21

TECHICAL SPECIFICATION | ETAD-H0354 △1 | 1 / 4

FORM HC0011-9-1

May.1.2024 Copyright 2024 HIROSE ELECTRIC CO., LTD. All Rights Reserved.

⚠1 ・Do not insert the crimped contact [DF50(K)-**SCFA(##)] at an angle to the socket in order to avoid unexpected damage.
Also, there is some deformation risk of crimped contact lance in case contact is wrenched at “not fully inserted” (to crimp socket) state.

Straight insertion (Correct)

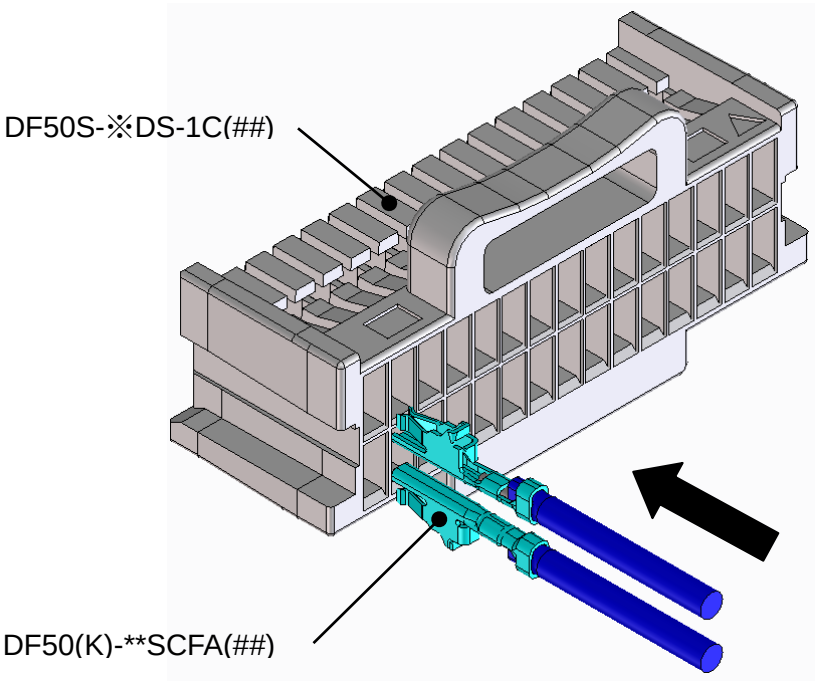

Angled insertion (Incorrect)

Up-and –down direction

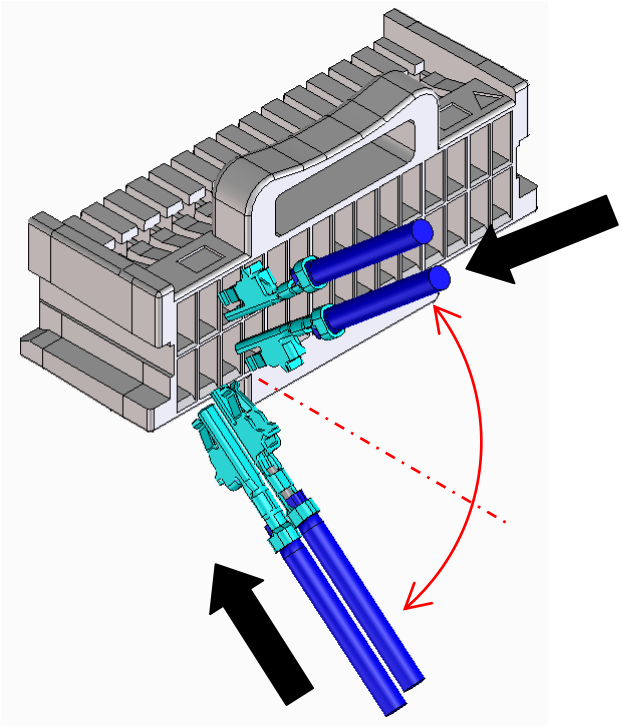

horizontal direction

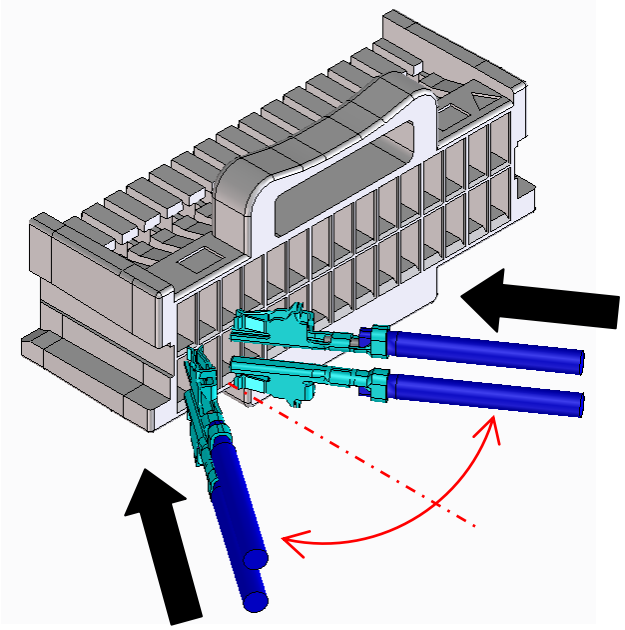

May.1.2024 Copyright 2024 HIROSE ELECTRIC CO., LTD. All Rights Reserved.

Scoop insertion (Incorrect)

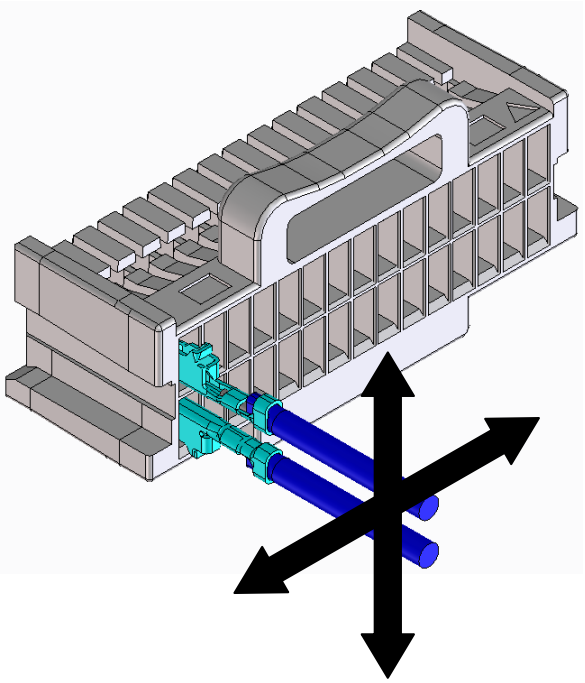

⚠1・After crimped contact insertion, please don't twist a cable excessively.

Twisted (Incorrect)

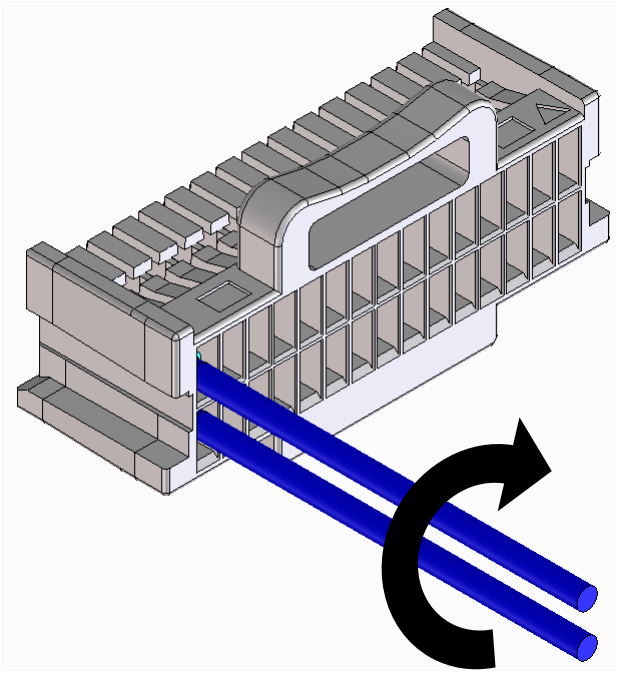

May.1.2024 Copyright 2024 HIROSE ELECTRIC CO., LTD. All Rights Reserved.

Confirmation of inserted contact conditions

Make sure that the contact lance is hooked by the housing lance of the crimp socket.

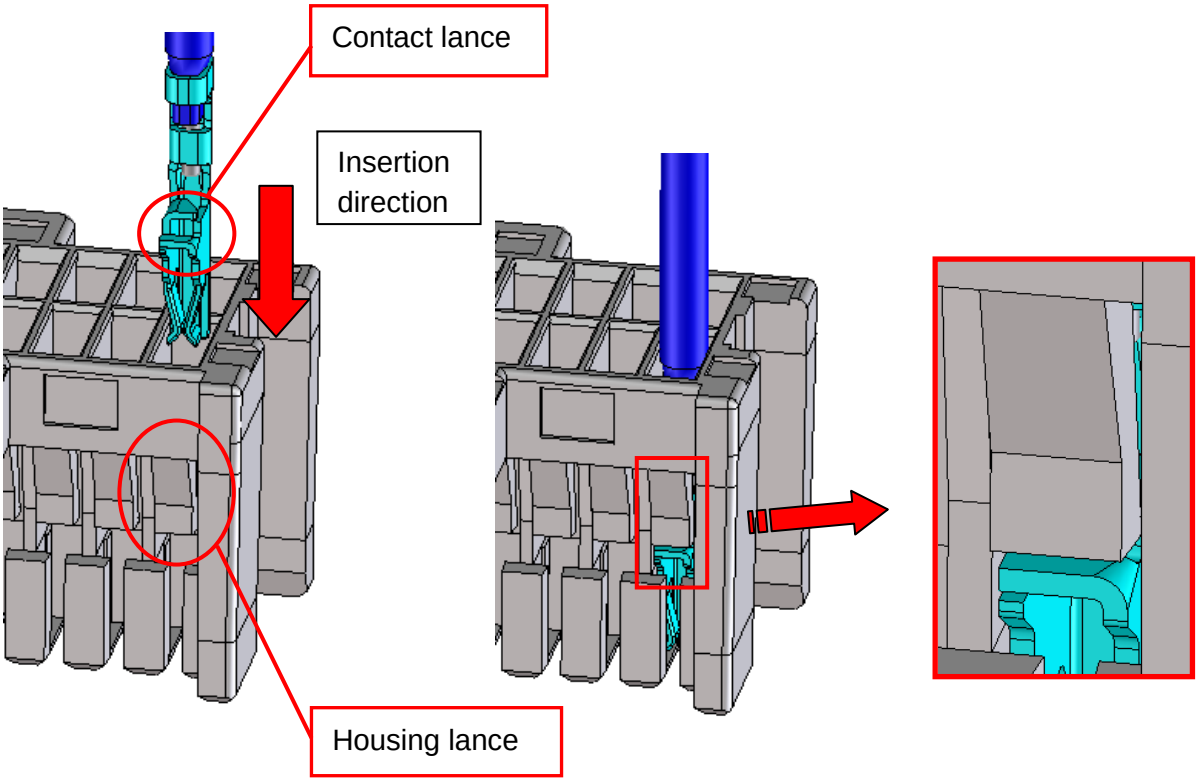

⚠1 NOTE: Repairing the crimp contact

For removing the inserted contact form socket, lift up the housing lance by using DF-C-PO(B) or a pointed needle, and pull out the cable simultaneously. The repair operation could make the lance strength lower, therefore, please do not reuse the repaired crimp socket and replace it to a new one.

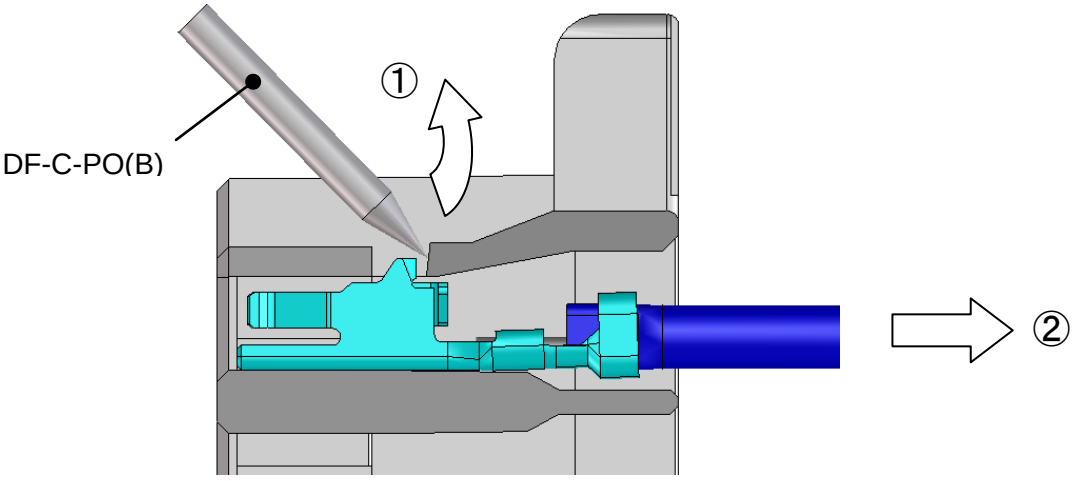

May.1.2024 Copyright 2024 HIROSE ELECTRIC CO., LTD. All Rights Reserved.