May.1.2024 Copyright 2024 HIROSE ELECTRIC CO., LTD. All Rights Reserved.
In case of consideration for using Automotive equipment / device which demand high reliability, kindly contact our sales window correspondents.

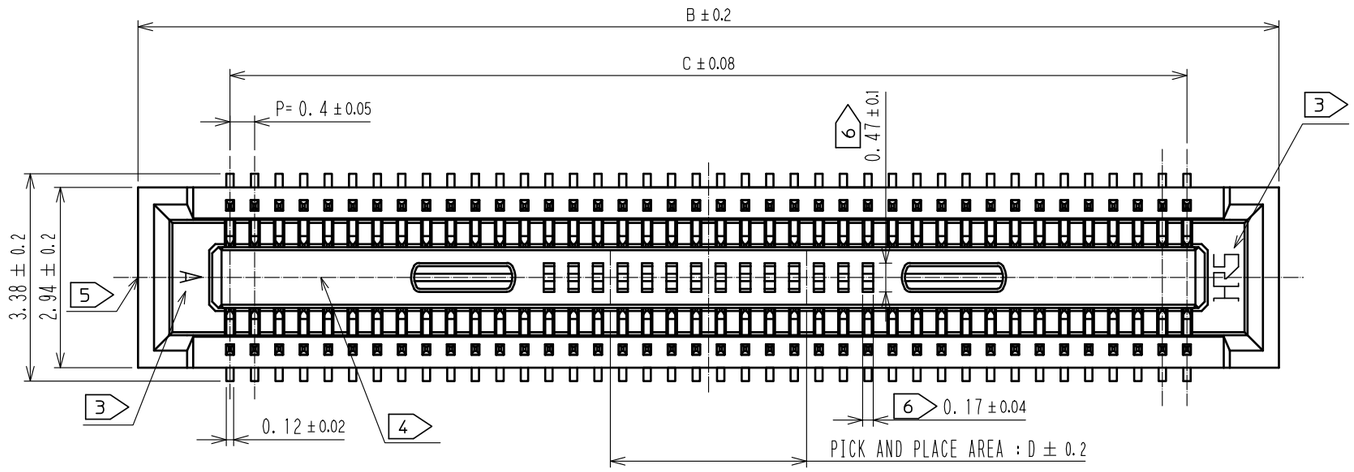

RECOMMENDED PATTERN

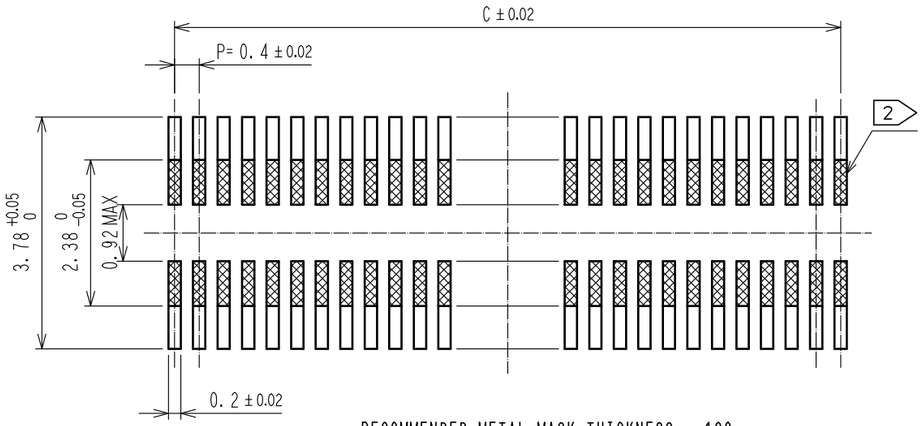

RECOMMENDED METAL MASK THICKNESS : 120μm
RECOMMENDED METAL MASK OPENING RATIO : 80% FOR LEAD PAD

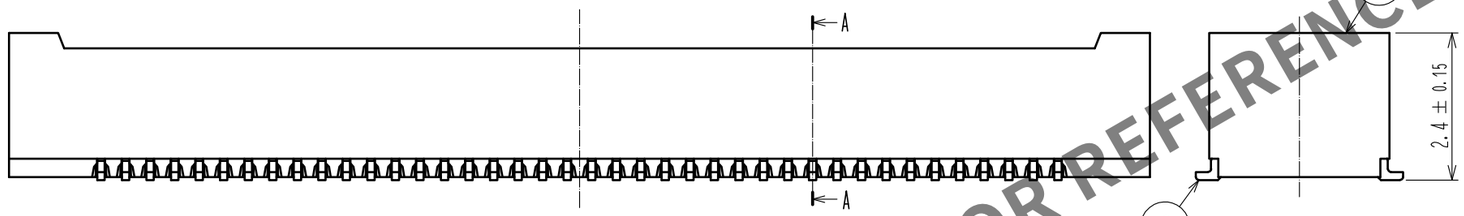

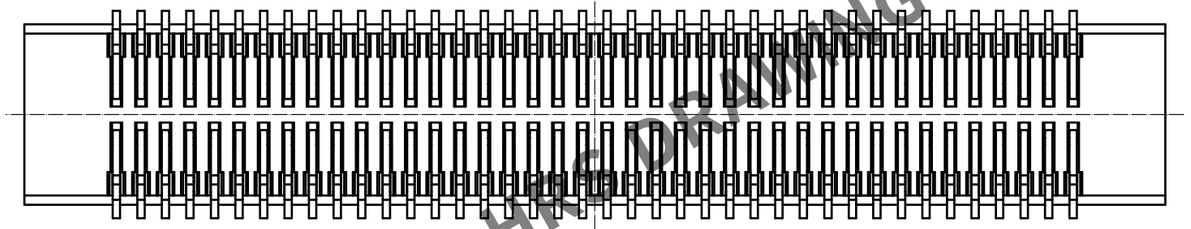

HRS DRAWING FOR REFERENCE

製品名	製品コード	B	C	D
DF40C(2.5)-10DS-0.4V(58)	—	4.6	1.6	1.0
DF40C(2.5)-20DS-0.4V(58)	CL684-4101-2-58	6.6	3.6	1.0
DF40C(2.5)-24DS-0.4V(58)	—	7.4	4.4	1.2
DF40C(2.5)-30DS-0.4V(58)	—	8.6	5.6	1.5
DF40C(2.5)-40DS-0.4V(58)	CL684-4112-9-58	10.6	7.6	3.2
DF40C(2.5)-50DS-0.4V(58)	CL684-4101-2-58	12.6	9.6	3.2
DF40C(2.5)-60DS-0.4V(58)	CL684-4085-8-58	14.6	11.6	3.2
DF40C(2.5)-70DS-0.4V(58)	—	16.6	13.6	3.2
DF40C(2.5)-80DS-0.4V(58)	—	18.6	15.6	3.2
DF40C(2.5)-90DS-0.4V(58)	—	20.6	17.6	3.2
DF40C(2.5)-100DS-0.4V(58)	—	22.6	19.6	3.2

NOTES) 1. ALL LEADS CO-PLANARITY SHALL BE 0.1 mm MAX.
2 IS NO PATTERN AREA OTHER THAN THE SAME CIRCUIT.
3 HRS MARK AND CAV NO. IS INDICATED IN APPROXIMAL POSITION SHOWN.
4 GATE POSITION OF 60 TO 100 POSITIONS IS POSITIONED IN APPROXIMAL AREA SHOWN.
5 GATE POSITION OF 10 TO 50 POSITIONS IS POSITIONED IN APPROXIMAL AREA SHOWN.
A PART OF THE WALL COULD BE NOTCHED FOR SETTING GATE.
6 60 TO 100 POSITIONS HAVE CONCAVE PORTION.

A-A(20:1)

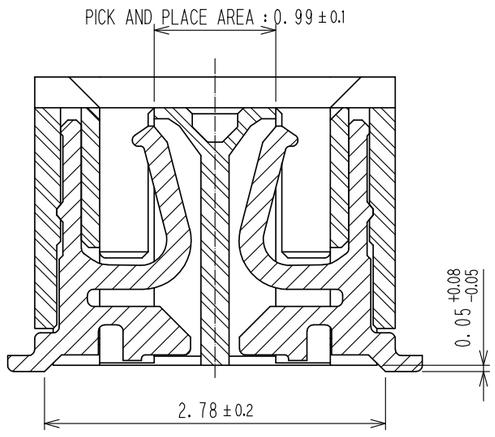

ENGAGEMENT FIGURE (20:1)

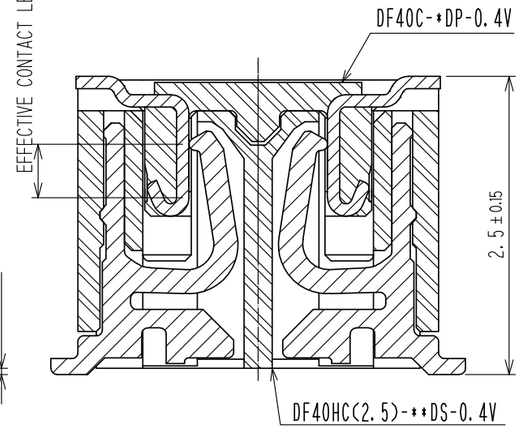

NO.	MATERIAL	FINISH , REMARKS	NO.	MATERIAL	FINISH , REMARKS
2	PHOSPHOR BRONZE	CONTACT AREA:GOLD 0.05μm MIN SMT LEAD:GOLD 0.05μm MIN UNDERPLATING:NICKEL 1μm MIN	6	PS	CLEAR, REINFORCEMENT COLLAR
			5	PS	BLACK, PLASTIC REEL
			4	POLYESTER	CLEAR, COVER TAPE
1	LCP	BLACK, UL94V-0	3	PS	CLEAR, EMBOSSED CARRIER TAPE

UNITS	SCALE	COUNT	DESCRIPTION OF REVISIONS	DESIGNED	CHECKED	DATE
mm	10 : 1	0				

HRS HIROSE ELECTRIC CO., LTD.

APPROVED	: MO. ISHIDA	17. 07. 14	DRAWING NO.	EDC-378341-00-00
CHECKED	: TS. MIYAZAKI	17. 07. 14	PART NO.	DF40HC(2. 5)-*DS-0. 4V(58)
DESIGNED	: SH. HOSODA	17. 07. 14	CODE NO.	CL684
DRAWN	: KT. KUSAKA	17. 07. 14		0 1/2

May.1.2024 Copyright 2024 HIROSE ELECTRIC CO., LTD. All Rights Reserved.
In case of consideration for using Automotive equipment / device which demand high reliability, kindly contact our sales window correspondents.

EMBOSSED CARRIER TAPE PACKAGING (5:1)

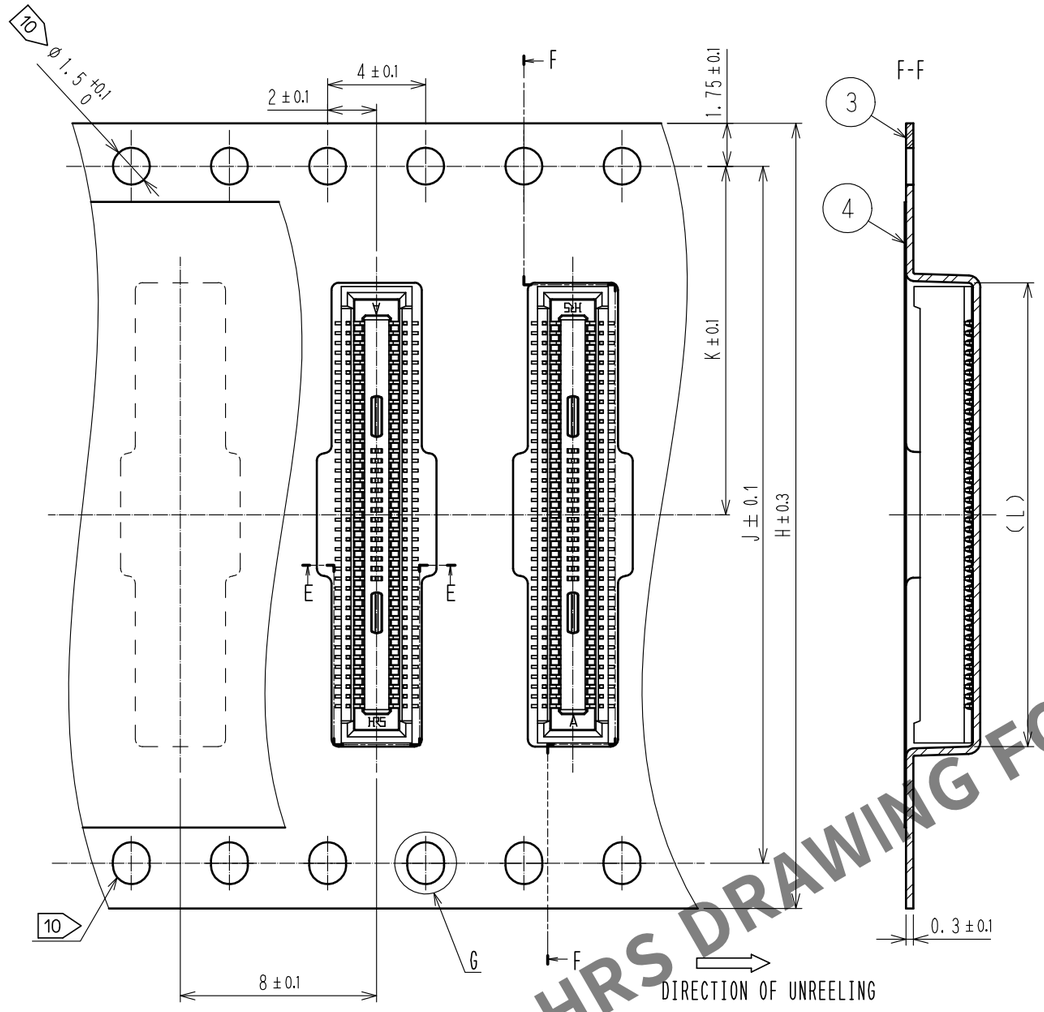

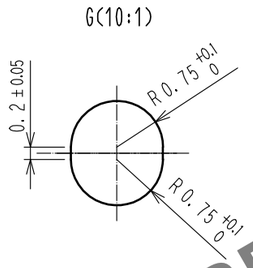

STYLE AND DIMENSION OF REEL(FREE SIZE)

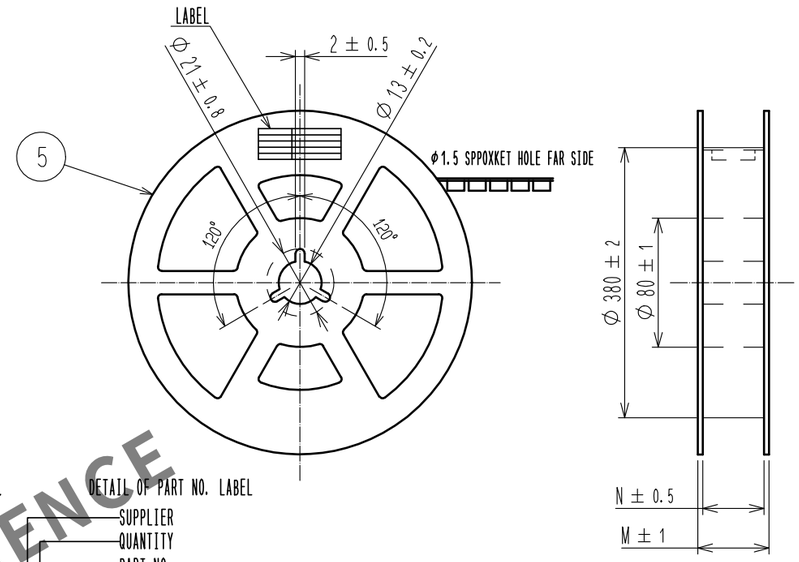

DETAIL OF PART NO. LABEL

SUPPLIER
QUANTITY
PART NO.
CODE NO.
DATE OF MANUFACTURED

製造年月日	** ** **
製品コード	** ** **
製品名	DF40HC(2.5)-*DS-0.4V(58)
数量	1000
納入者	ヒロセ電機(株)

製品名	H	J	K	L	M	N
DF40C(2.5)-10DS-0.4V(58)	16	—	7.5	4.9	21.5	17.5
DF40C(2.5)-20DS-0.4V(58)	16	—	7.5	6.9	21.5	17.5
DF40C(2.5)-24DS-0.4V(58)	16	—	7.5	7.7	21.5	17.5
DF40C(2.5)-30DS-0.4V(58)	24	—	11.5	8.9	29.5	25.5
DF40C(2.5)-40DS-0.4V(58)	24	—	11.5	10.9	29.5	25.5
DF40C(2.5)-50DS-0.4V(58)	24	—	11.5	12.9	29.5	25.5
DF40C(2.5)-60DS-0.4V(58)	24	—	11.5	14.9	29.5	25.5
DF40C(2.5)-70DS-0.4V(58)	32	28.4	14.2	16.9	37.5	33.5
DF40C(2.5)-80DS-0.4V(58)	32	28.4	14.2	18.9	37.5	33.5
DF40C(2.5)-90DS-0.4V(58)	44	40.4	20.2	20.9	49.5	45.5
DF40C(2.5)-100DS-0.4V(58)	44	40.4	20.2	22.9	49.5	45.5

NOTES)
7. PER REEL 1000 CONNECTORS.
8. THE DIMENSIONS IN PARENTHESES ARE FOR REFERENCE.
9 REFER TO JIS C 0806(PACKING OF COMPONENTS FOR AUTOMATIC HANDLING)
10 10 TO 60 POSITIONS EMBOSSED CARRIER TAPE HAS THE SPROCKET HOLE ONLY ONE SIDES.
11 AFTER PACKAGING. ROLL 2 METERS OF THE REINFORCEMENT COLLAR TO OUTER CIRCUMFERENCE OF TAPE AND REEL POCKET. AND TAPE DOWN AT THE END THE COLLAR.

E-E(10~30POS.)

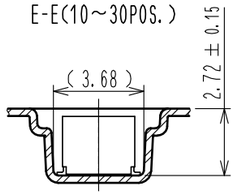

E-E(40~100POS.)

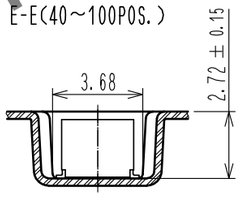

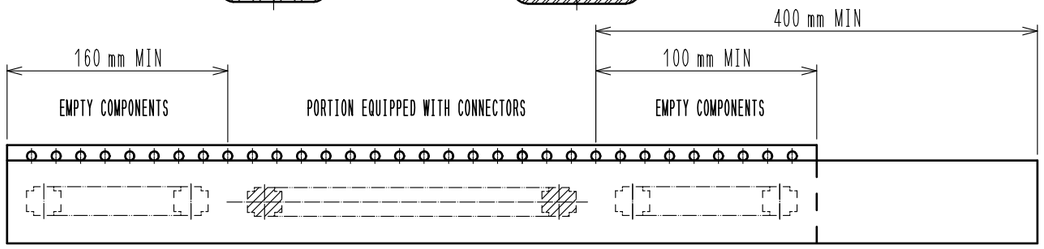

TRAILER 9 TAPING LEADER

D-D (FREE)

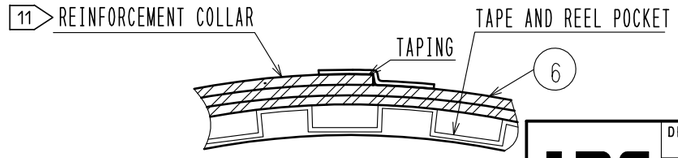

HRS DRAWING FOR REFERENCE

DRAWING NO.	EDC-378341-00-00
PART NO.	DF40HC(2.5)-*DS-0.4V(58)
CODE NO.	CL684

0 2/2

FORM HC0011-5-8