May.1.2024 Copyright 2024 HIROSE ELECTRIC CO., LTD. All Rights Reserved.
In case of consideration for using Automotive equipment / device which demand high reliability, kindly contact our sales window correspondents.

	COUNT	DESCRIPTION OF REVISIONS	BY	CHKD	DATE		COUNT	DESCRIPTION OF REVISIONS	BY	CHKD	DATE
△					. .	△					. .
△					. .	△					. .
△					. .	△					. .

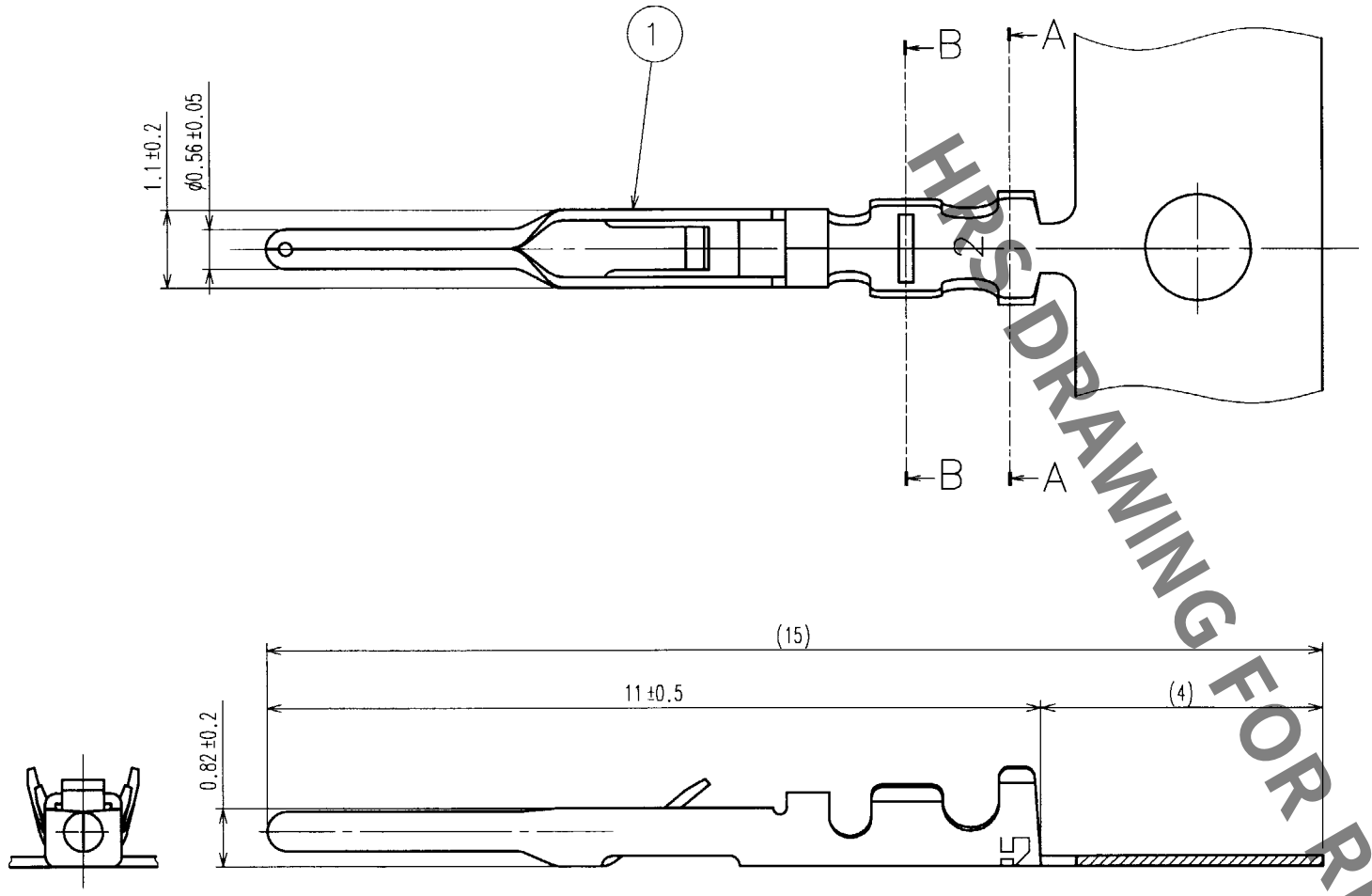

B-B(20:1)

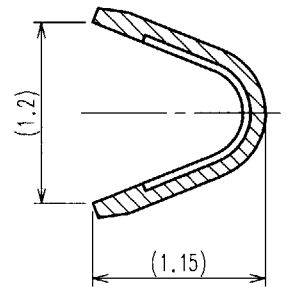

A-A(20:1)

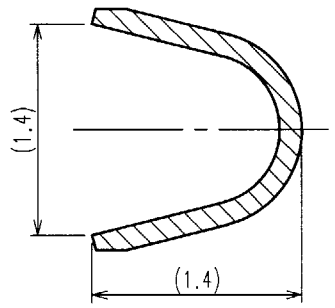

3 FIG.1 RECOMMENDED CABLE PREPARATION DIMENSIONS

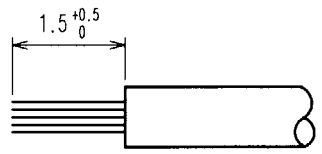

2 REEL (1:10)

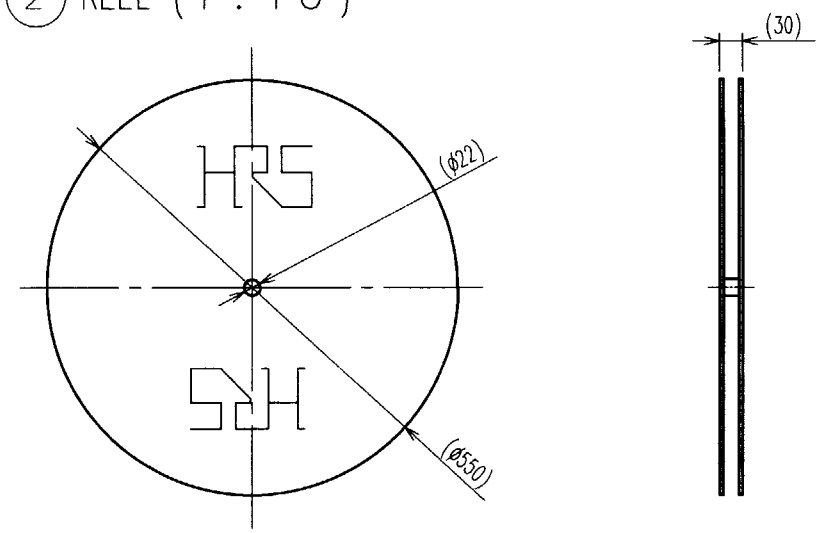

HRS DRAWING FOR REFERENCE

NOTES
1 THIS PRODUCT IS APPLY TO THE WIRE 26-30 AWG(WIRE JACKET DIAMETER φ1 MAX).
2 PER REEL:10000 CONTACTS
3 RECOMENDED CABLE PREPARATION DIMENSIONS ARE SHOWN IN FIG.1.

NO.	MATERIAL	FINISH, REMARKS	NO.	MATERIAL	FINISH, REMARKS
1	PHOSPHOR BRONZE	SELECTIVE GOLD PLATING	2	CARTON	(TERMINAL WINDING REEL)

CODE NO.(OLD)	DRAWN	DESIGNED	CHECKED	APPROVED	RELEASED
	H.Zemba 01.01.05	H.Zemba 01.01.05	E.Kunii 01.01.05	M.Yoshida '01.01.10	. .

SCALE 10 : 1	DRAWING NO. EDC3-112452	PART NO. HR30-PC-211
UNITS mm	HRS HIROSE ELECTRIC CO., LTD	CODE NO. CL130-0016-0 1/1

TO
R