May.1.2024 Copyright 2024 HIROSE ELECTRIC CO., LTD. All Rights Reserved.
In case of consideration for using Automotive equipment / device which demand high reliability, kindly contact our sales window correspondents.

5 Fig.2 (1:1)

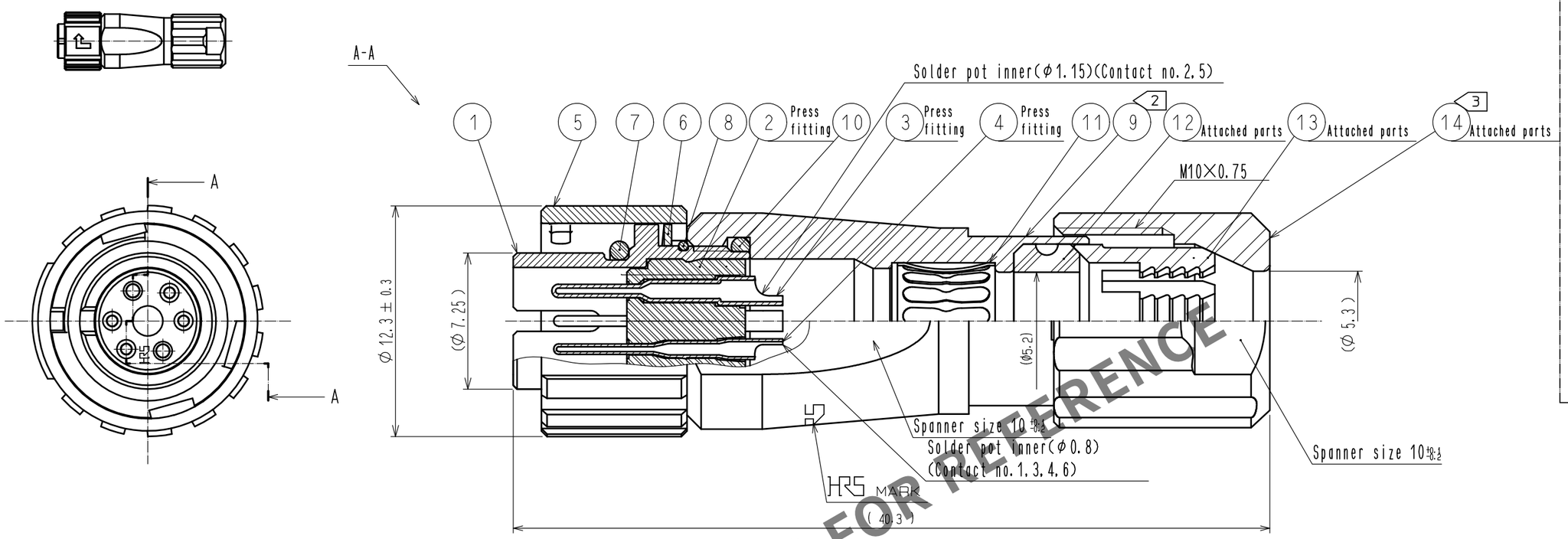

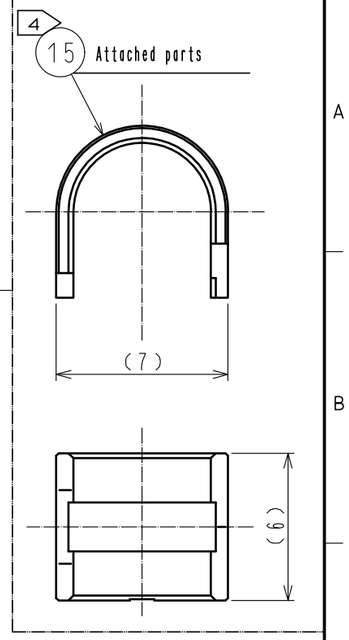

Fig.1 (2:1)

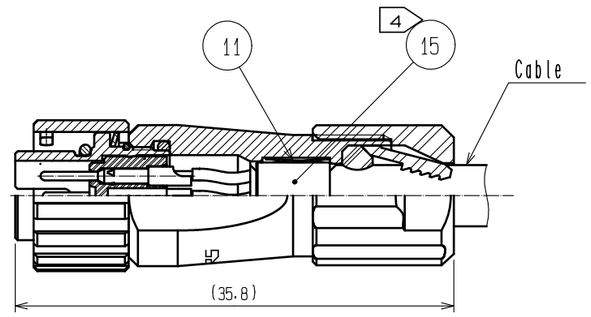

HRS DRAWING FOR REFERENCE

Notes
1 Plating(ref.no.③,④)
Contact area : gold 0.2μm min
Lead area : gold 0.03μm min
Under plating : nickel 2μm min
2 The recommended clamp torque of ref.No.⑨ to be 1 to 1.5n・m.
Thread locker to the threaded portion of ref.no.① is recommended to prevent ref.No.⑨ from loosing.
Recommended thread locker:loctite 263, henkel japan ltd.
3 The recommended clamp torque of ref.no.⑭ to be 0.8 to 1n・m.
Thread locker and lock primer to the threaded portion M10×0.75 of ref.No.⑨ is recommended
To prevent ref.no. ⑭ from loosing.
Recommended thread locker and lock primer : loctite 263, lock primer 7649, henkel japan ltd.
4 Fasten ref.no.⑮ to the cable with the cable crimping tool.
And make ref.no.⑮ contact with ref.no.⑪ (refer to fig.1).
Applicable cable crimping tool : HR10A-TC-02(CL150-0041-2)(the hole diameter for crimping:φ5.3)
5 Fig.2 shows the appearance after assembly.
6 Applicable cable assembly fixture : LF07BP-T01(CL150-0232-0)
Cable assembly fixture is used as a receptacle stand of extract
And the part no.① of an assembly.
7 Rotation examples of no.⑤,⑨ and ⑭ to ① are shown.
8 The cable pull and twisting strength, waterproof tightness and other characteristics may differ, depending on the cable structure, please confirm before the use.

NO.	MATERIAL	FINISH , REMARKS	NO.	MATERIAL	FINISH , REMARKS
8	Stainless steel				
7	Chloroprene rubber	(Black)	15	Brass	Nickel plating
6	Stainless steel		14	PPS	(Natural,Brown) UL94V-0
5	Zinc alloy	Nickel plating	13	Polyamide	(Natural,Milky white) UL94V-0
4	Copper alloy	1	12	Chloroprene rubber	(Black)
3	Copper alloy	1	11	Phosphor bronze	Nickel plating
2	PPS	(Black) UL94V-0	10	Chloroprene rubber	(Black)
1	Zinc alloy	Nickel plating	9	Zinc alloy	Nickel plating

UNITS	SCALE	COUNT	DESCRIPTION OF REVISIONS	DESIGNED	CHECKED	DATE
mm	4 : 1	0				

HRS HIROSE ELECTRIC CO., LTD.

APPROVED	HY. KOBAYASHI	18.02.22	DRAWING NO.	EDC-119201-31-00
CHECKED	HY. KOBAYASHI	18.02.22	PART NO.	LF07WBP-6P-A(31)
DESIGNED	TY. SUZUKI	18.02.21	CODE NO.	CL136-0016-0-31
DRAWN	HM. SAITO	18.02.19		0 1/1

FORM HC0011-5-7