May.1.2024 Copyright 2024 HIROSE ELECTRIC CO., LTD. All Rights Reserved.
In case of consideration for using Automotive equipment / device which demand high reliability, kindly contact our sales window correspondents.

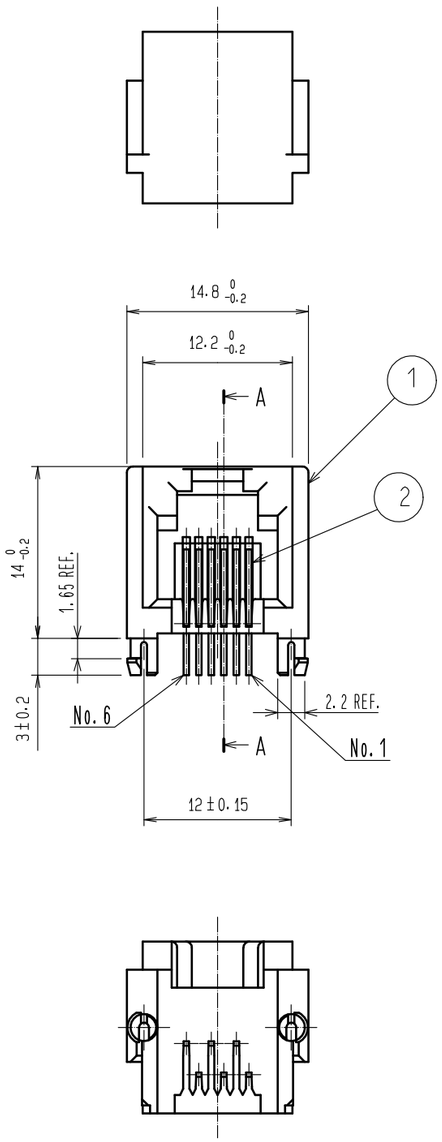

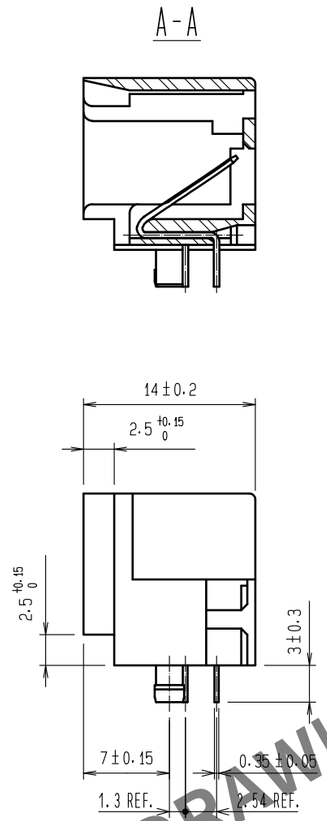

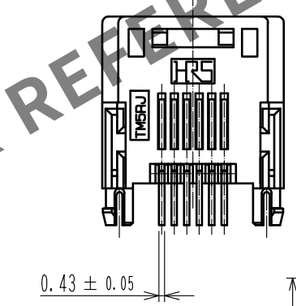

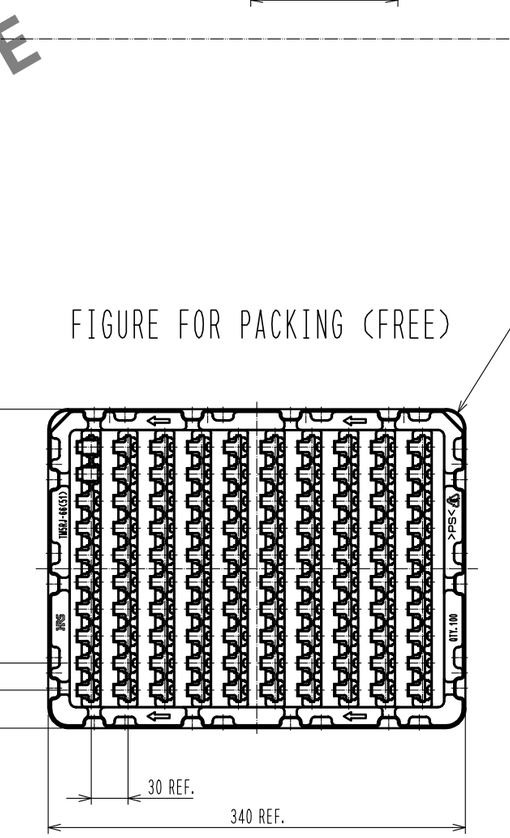

HRS DRAWING FOR REFERENCE

NOTE 1 TO BE PACKED IN TRAY: 100pcs/TRAY.

NO.	MATERIAL	FINISH . REMARKS
1	PBT	GRAY, UL94V-0

NO.	MATERIAL	FINISH . REMARKS
3	PS	
2	PHOSPHOR BRONZE	CONTACT AREA : GOLD PLATING 1.27μm MIN. LEAD AREA : TIN PLATING 1μm MIN. UNDER PLATING : NICKEL PLATING 1.27μm MIN.

UNITS	SCALE	COUNT	DESCRIPTION OF REVISIONS	DESIGNED	CHECKED	DATE
mm	2 : 1	0				

HRS HIROSE ELECTRIC CO., LTD.

APPROVED	: MN. KENJO	20211126	DRAWING NO.	EDC-023182-61-00
CHECKED	: KG. OKITA	20211125	PART NO.	TM5RJ-66(61)
DESIGNED	: MO. SHIMOYAMA	20211125		
DRAWN	: MO. SHIMOYAMA	20211125	CODE NO.	CL0222-1092-8-61

0 1/1

FORM HC0011-5-7