Apr.1.2024 Copyright 2024 HIROSE ELECTRIC CO., LTD. All Rights Reserved.
In case of consideration for using Automotive equipment / device which demand high reliability, kindly contact our sales window correspondents.

NOTES
1. WHEN MATING THE CONNECTOR , PLEASE HOLD MILLING AREA OF 6.4±0.2[mm] WITH A SPANNER NOT TO PLACE STRESS ON PCB BY THE TORQUE.
2. 0-80UNF-2B SCREW TIGHTENING TORQUE IS 0.09 N・m. PLEASE TIGHTEN THE SCREWS EVENLY WHEN MOUNTING THE CONNECTORS TO ENSURE STABLE ELECTRICAL CONTACT.
3. PLEASE USE A PCB MOUNTING SCREW OF THE LENGTH OF L[mm/in]. THE LENGTH OF L[mm/in] IS PCB THICKNESS t1 + SPRING WASHER THICKNESS t2 + 1.8mm/0.07in. PLEASE USE A SCREW WITH SPRING WASHER.
4. THE INDICATED DIMENSION IS THE CASE OF WHICH DIELECTRIC CONSTANT OF SUBSTRATE IS 3.6 AND THICKNESS IS t=0.2mm/0.008in. LAND PATTERN LAYOUT DEPENDS ALSO ON ELECTRIC CONSTANT, THICKNESS AND LAYER CONSTRUCTION OF PCB. FOR BETTER RF PERFORMANCE, SIMULATION OF PCB WITH CONNECTOR IS RECOMMENDED.
5. RECOMMENDED PCB THICKNESS t1 IS GREATER THAN 1.0mm/0.04in.
6. SIDE PLATING OF THE BOARD IS RECOMMENDED.
7. (2) THIS PRODUCT IS A SOLDERLESS MOUNTED CONNECTOR FOR PROTOTYPE EVALUATION OF HIGH SPEED TRANSMISSION BOARDS. IT IS NOT RECOMMENDED FOR USE IN ACTUAL COMMERCIAL EQUIPMENT.

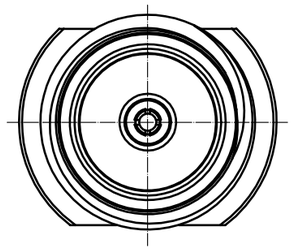

(3:1)

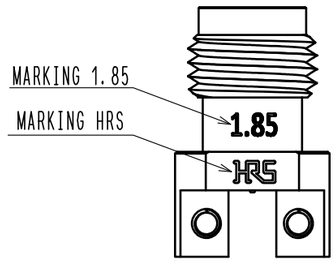

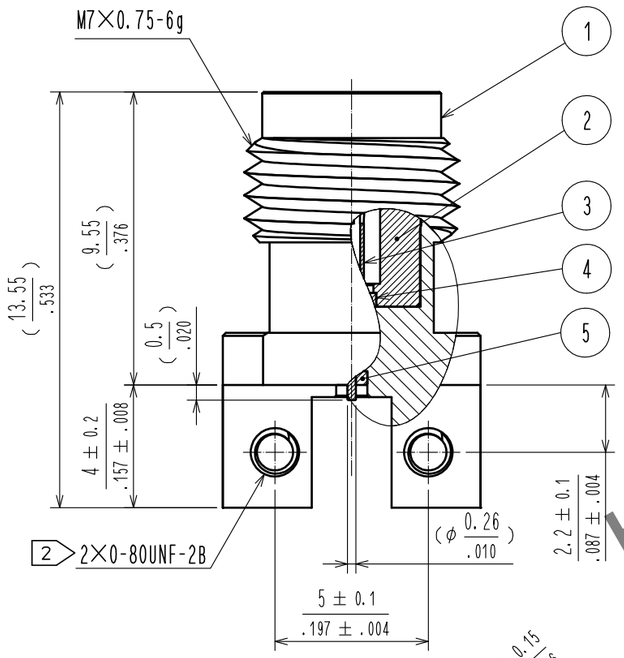

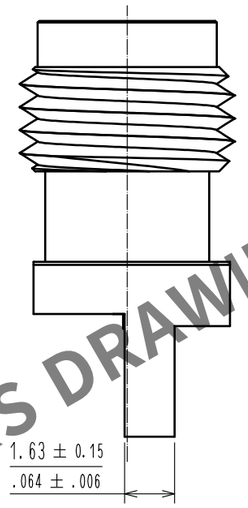

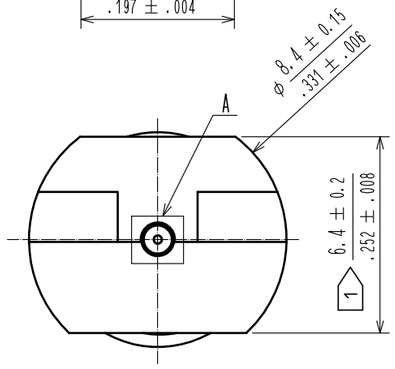

A
(20:1)

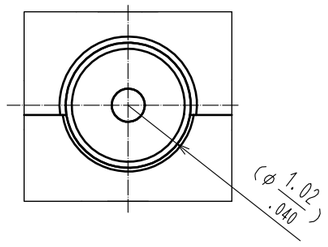

MOUNTING OF CONNECTOR
(1) WHEN THE CONNECTOR IS MOUNTED ON PCB. PLEASE DO NOT ALLOW A GAP BETWEEN THE EDGE OF PCB AND CONNECTOR.
(2) PLEASE MOUNT THE CONNECTOR AS LOCATED IN THE MIDDLE OF THE SIGNAL PAD OF PCB.

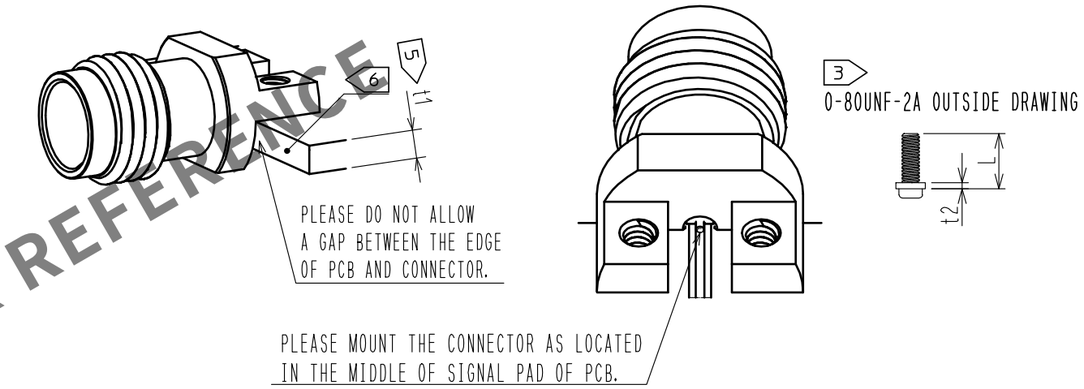

RECOMMENDED PC BOARD PATTERN DRAWING

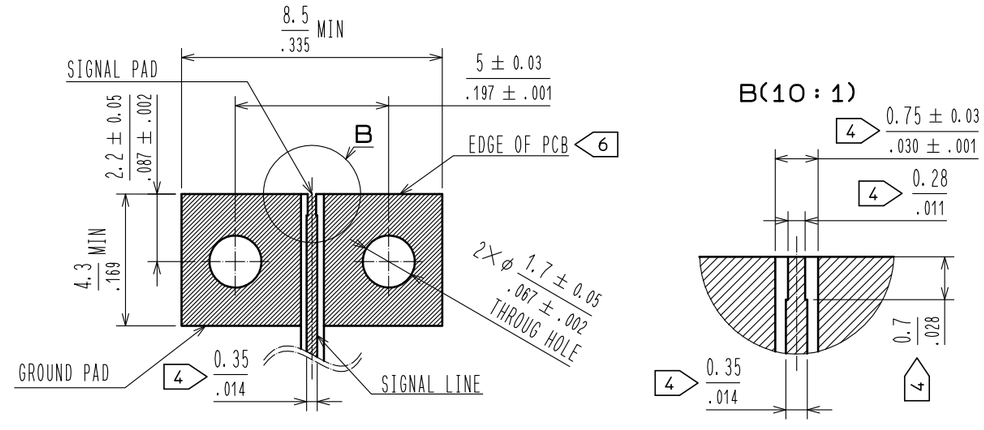

REGIST FOR SIGNAL PAD AND GROUND PAD IS PROHIBITED.

NO.	MATERIAL	FINISH , REMARKS	NO.	MATERIAL	FINISH , REMARKS
			5	POLYETHER IMIDE	
2	STAINLESS STEEL	PASSIVATE	4	POLYETHER IMIDE	
1	BRASS	GOLD PLATING	3	BERYLLIUM COPPER	GOLD PLATING

UNITS [mm/in]	SCALE 5 : 1	COUNT	DESCRIPTION OF REVISIONS	DESIGNED	CHECKED	DATE
	(2)	1	DIS-D-00016663	RO. YOKOYAMA	TS. KANEKO	20230818

HRS HIROSE ELECTRIC CO., LTD.

APPROVED	: TS. NOBE	20190823	DRAWING NO.	EDC-384075-00-00
CHECKED	: NK. NINOMIYA	20190822	PART NO.	HV-LR-SR2
DESIGNED	: AH. MARUYAMA	20190821	CODE NO.	CL0338-0018-0-00
DRAWN	: AH. MARUYAMA	20190821		(2) 1/1

HRS DRAWING FOR REFERENCE