Apr.1.2024 Copyright 2024 HIROSE ELECTRIC CO., LTD. All Rights Reserved.

Document No.	DOC200825-005

NO.	Operation Drawing	Description
1	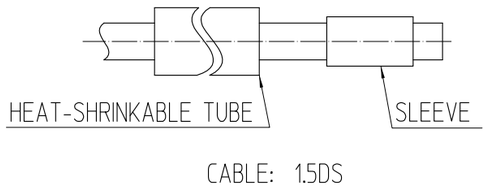	1. Insert sleeve and HEAT-SHRINKABLE TUBE into cable
2	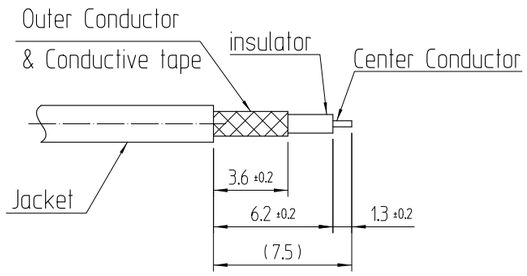	2. Strip cable as the left picture Note1. Cut outer conductor and insulator as vertical shape. Note2. During the cutting, be careful not to damage the cable.
3	Conductive tape should wrap dielectric properly. If there is peeling off of the tape, make sure to attach it to dielectric. 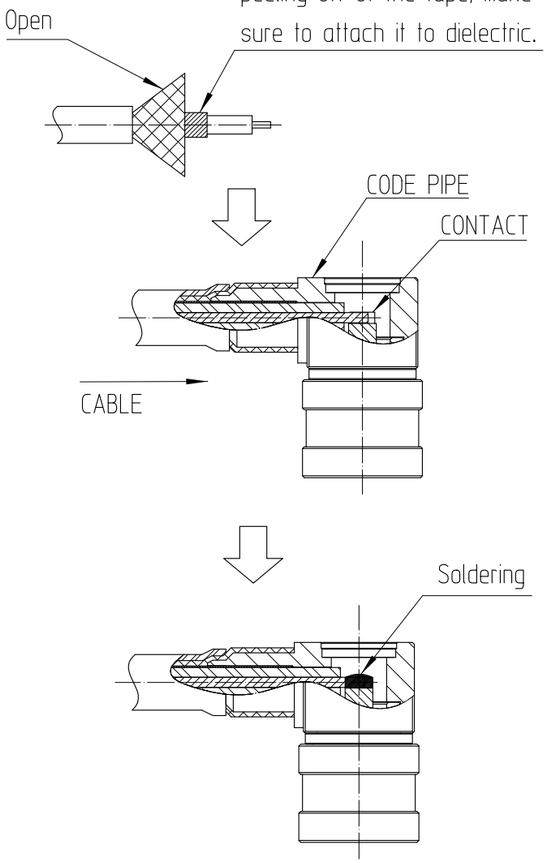	3-1. Open the outer conductor with the tool (Ex.Pincette etc.) Note1. Be careful not to cause the conductive tape peeling phenomenon when openning the CABLE external conductor. 3-2. Insert cable to plug connector Note2. Push CABLE into CONTACT of CONNECTOR until it is positioned normally. Note3. During insertion, Insert conductive tape into plug and outer conductor to outside of plug 3-3. Solder center conductor of cable and contact of connector. Note4. No deformation on dielectric after soldering Note5. Do not contact with CODE PIPE due to excessive soldering. Note6. If contamination by FLUX occurs around lead, wash with IPA and proceed with Air blow. (Prevent voltage proof fault)

Document No.	DOC200825-005

NO.	Operation Drawing	Description
4	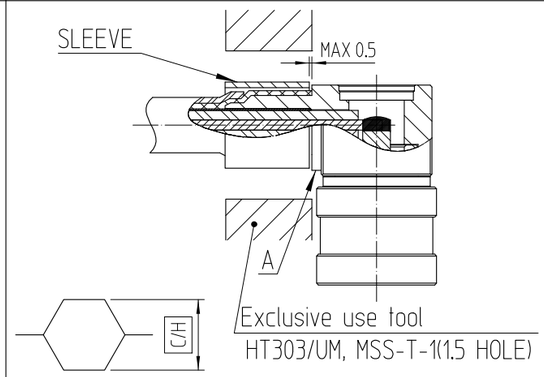	4. Place the sleeve as the left picture, and clamp with exclusive use tool, HT303/UM, MSS-T-1(1.5 HOLE) Note1. Gap between sleeve and plug is 0.5mm Max. Note2. No clamp on position A. Note3. Press the tool until crimping is complete. Note4. After crimping, the position of sleeve shall satisfy the dimensions shown in the left figure. C/H : 3.82 max.
5	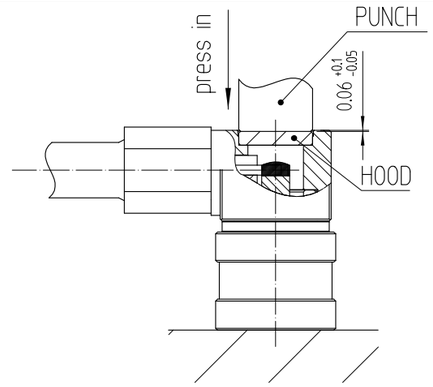	5. Press HOOD into CONNECTOR body. Note1. Pressed dimension of HOOD and CONNECTOR body shall satisfy 0.06+0.1/-0.05.
6	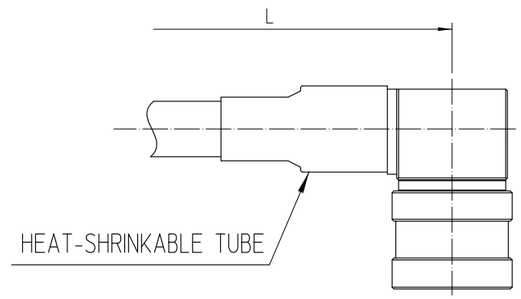	6-1. Move HEAT-SHRINKABLE TUBE to the position shown in the figure, Shrink HEAT-SHRINKABLE TUBE with HEAT GUN 6-2. Reference for cable cutting length as the left picture. (Reference) Cable cutting length based on L Cable cutting length: L + 0.3

	COUNT	DISCRIPTION OF REVISIONS	B Y	CHKD	DATE		COUNT	DISCRIPTION OF REVISIONS	B Y	CHKD	DATE
△					. .	△					. .
△					. .	△					. .
△					. .	△					. .

HARNESS OPERATION DRAWING	DRAWN	DESINGED	CHECKED	APPROVED	RELEASED
製品名 PART NO. POK19-LP-1.5D	G.S CHOI 20.08.26	G.S CHOI 20.08.26	D.G KIM 20.08.26	H.S KIM 20.08.26	ENG 20.08.26 DEPT
HRS HIROSE KOREA CO.,LTD.	DRAWING NO. DOC200825-005				1/1