May.1.2024 Copyright 2024 HIROSE ELECTRIC CO., LTD. All Rights Reserved.
In case of consideration for using Automotive equipment / device which demand high reliability, kindly contact our sales window correspondents.

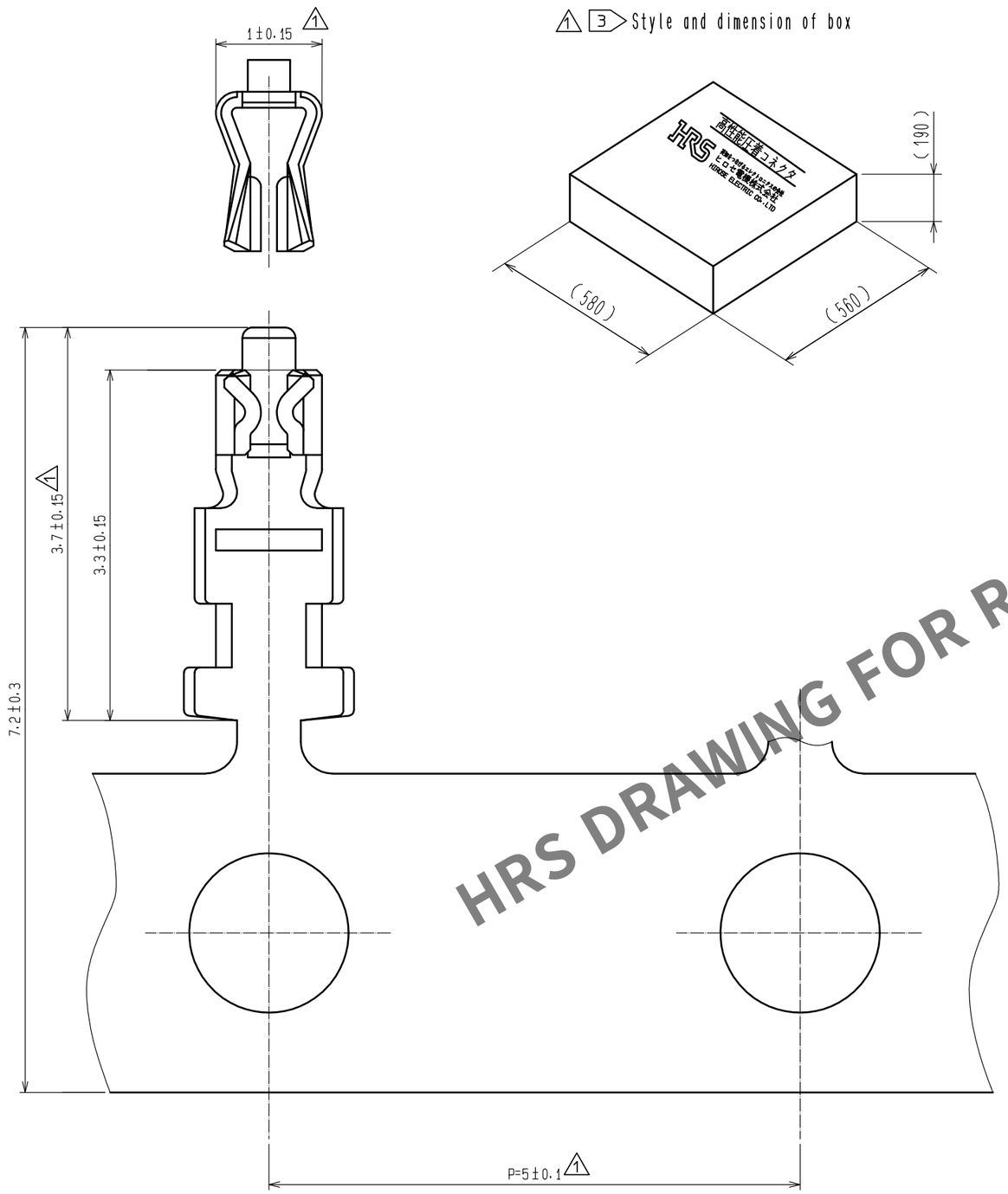

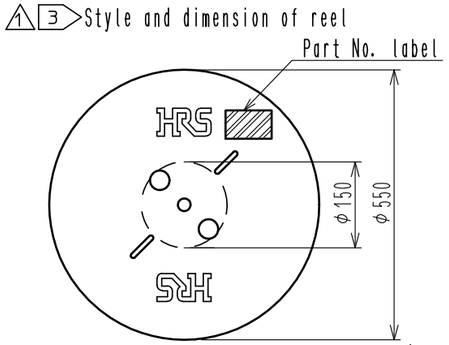

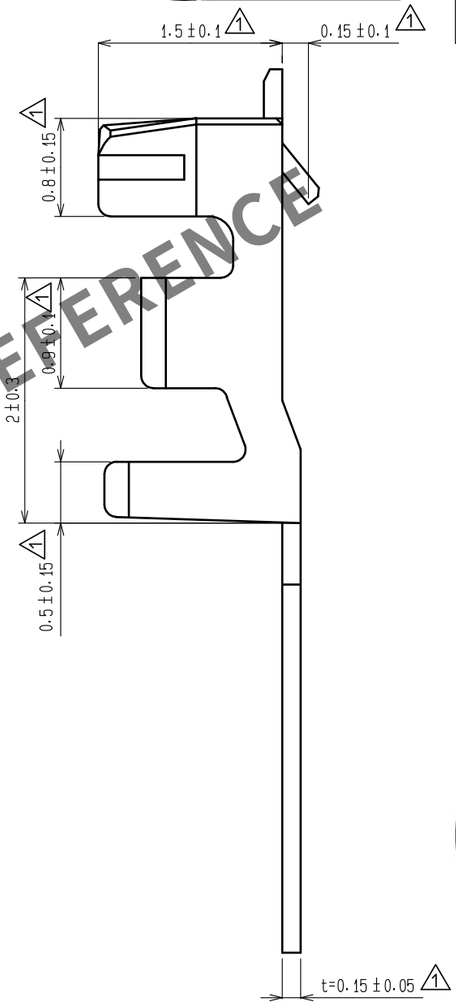

Detail of part No. label

HRS	検査
品名コード	CL536-0300-5-41
品名	DF13-2630SCF(41)
数量	20000
仕様	
LOT No.	
継ぎ目	

Section
Lot No.
Specification
Quantity
Part No.
Code No.
Inspection

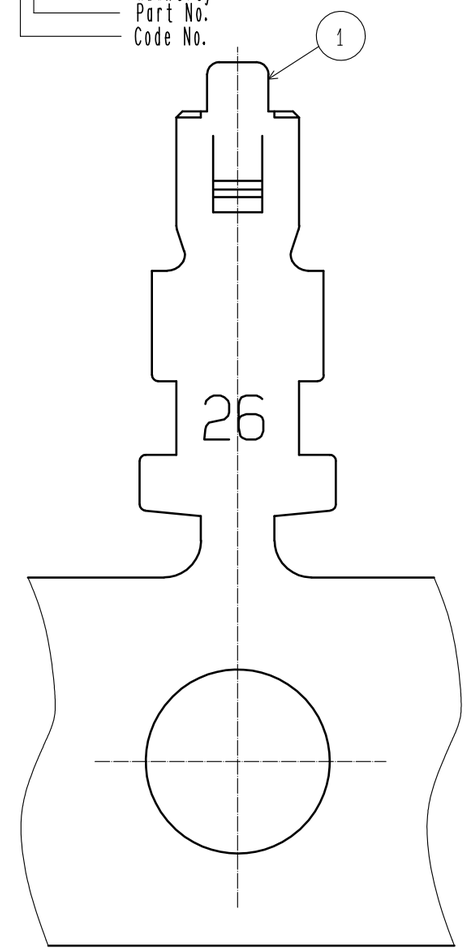

HRS DRAWING FOR REFERENCE

Note 1. Applicable wire : 26 to 30 AWG
Outer diameter : φ0.56 to 1.0mm
2. 1 reel:20000 contacts.
3. Style of reel and box are shown in figure.
4. A maximum of 5 reels are packed up in one box.
5. Please be sure to check the form of crimping using a cable when you adjust applicator.
6. Refer to the technical specification(ATAP-H0373-00)for the packing type.
7. Refer to the crimping quality standard(ETAD-H0953-00)for the packing type.

NO.	MATERIAL	FINISH , REMARKS
1	Phosphor bronze	Tin plating 1μm min

UNITS	SCALE	△の数	訂正記事	設計	検図	年月日
mm	20 : 1	17	DIS-H-00004839	HT. SATO	SZ. ONO	20190513

HIROSE ELECTRIC CO., LTD.

承認 :	KJ. KATAYOSE	20050105
検図 :	TY. OMA	20050105
設計 :	TS. KUMAZAWA	20050105
製図 :	TS. KUMAZAWA	20050105

図番 : EDC-081857-41-04
製品名 : DF13-2630SCF(41)
製品コード : CL536-0300-5-41
1/1

FORM HC0011-5-3