Apr.1.2024 Copyright 2024 HIROSE ELECTRIC CO., LTD. All Rights Reserved.
In case of consideration for using Automotive equipment / device which demand high reliability, kindly contact our sales window correspondents.

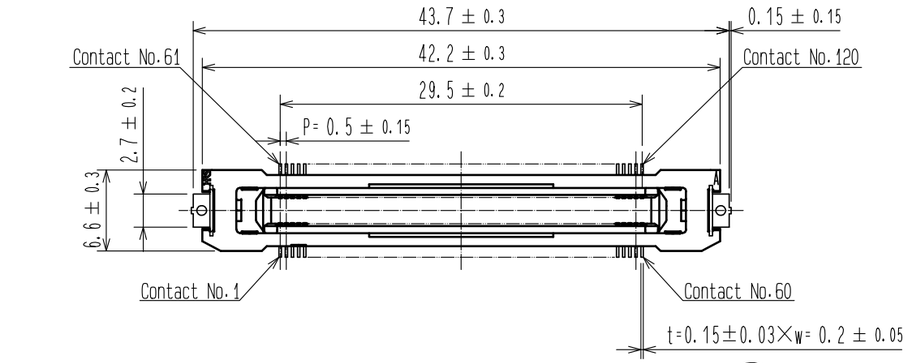

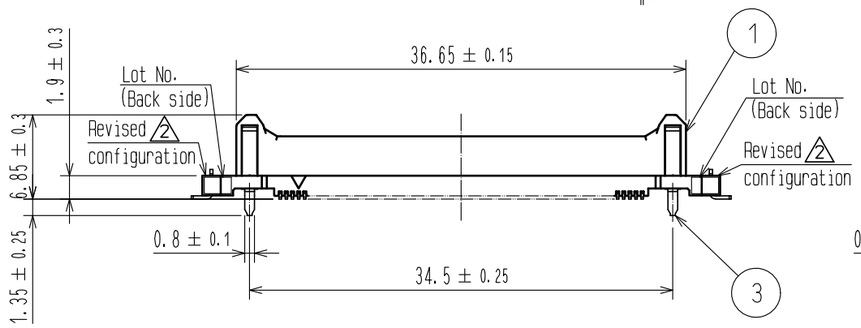

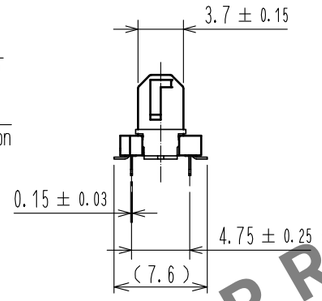

RECOMMENDED LAND PATTERN DIMENSION OF PCB

(PCB THICKNESS:t=1.6mm)

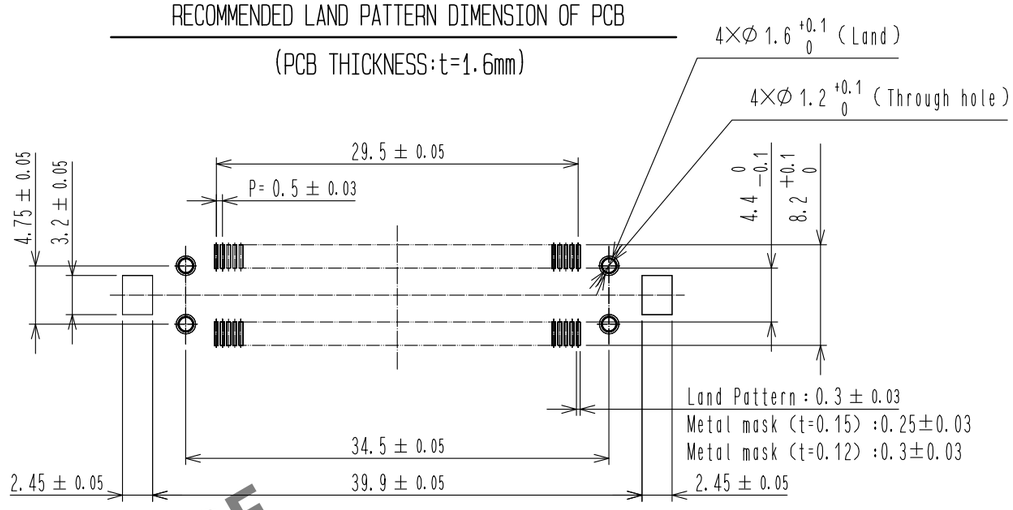

6 PCB DISTANCE (No scale)

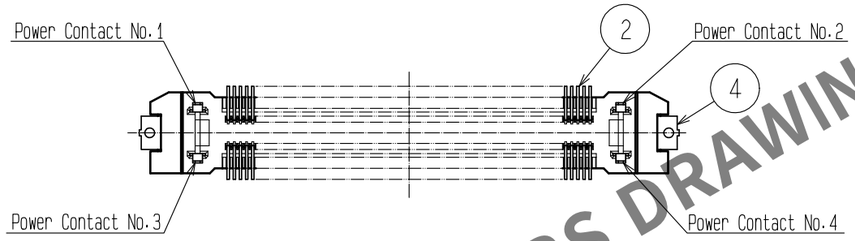

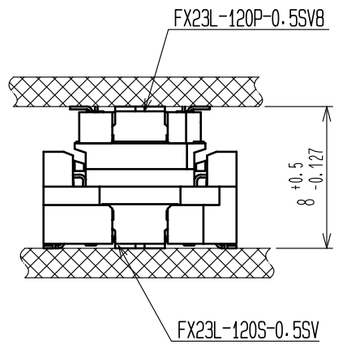

HRS DRAWING FOR REFERENCE

2 DRAWING FOR PACKING (No scale)

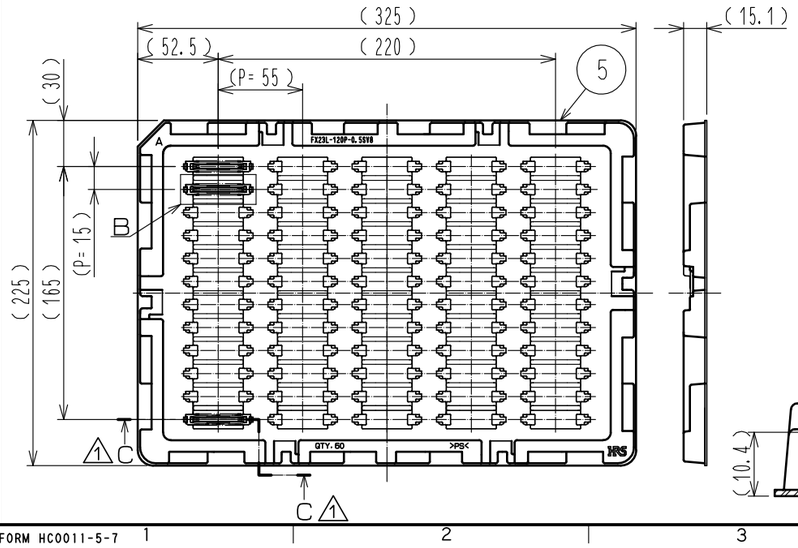

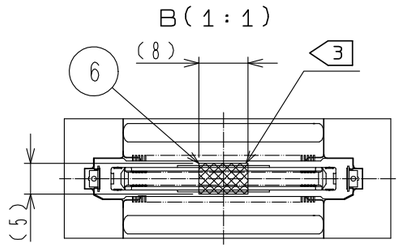

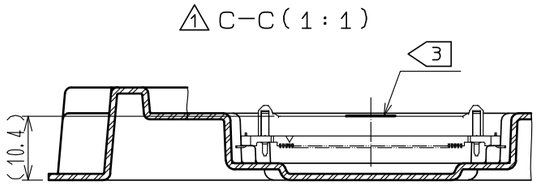

Note
1 Lead CO-Planarity is 0.1mm MAX.
2 This is packaged in tray.(60pcs/tray)
3 It shows the vacuum pickup area. Remove the mylar tape before mating connectors.
4 Blemish and hit mark can be occured through out the manufacturing process which doesn't affect quality level.
5 The dimensions in parentheses are for references.
6 Please use the connectors within the specified PCB distance.

NO.	MATERIAL	FINISH , REMARKS	NO.	MATERIAL	FINISH , REMARKS
			6	POLYIMIDE	(TAPE FOR VACUUM PICKUP)
			5	POLYSTYRENE	(TRAY)
2	COPPER ALLOY	CONTACT AREA:GOLD 0.1μm	4	BRASS	TIN-PLATING 1μm
		LEAD AREA:GOLD 0.03μm	3	COPPER ALLOY	CONTACT AREA:GOLD 0.1μm
		UNDER PLATING:NICKEL 1.3μm			LEAD AREA:TIN-PLATING 1μm
1	POLYAMIDE	BLACK UL94V-0			UNDER PLATING:NICKEL 1.3μm

UNITS	SCALE	COUNT	DESCRIPTION OF REVISIONS	DESIGNED	CHECKED	DATE
mm	2 : 1	2	DIS-F-00001540	TS.OONO	KN.SHIBUYA	16.08.23

HRS HIROSE ELECTRIC CO., LTD.

APPROVED	HS.OKAWA	15.05.12
CHECKED	KN.SHIBUYA	15.05.12
DESIGNED	TS.OONO	15.05.12
DRAWN	Wonsuk.Yoon	15.05.11

DRAWING NO. EDC-358037-00-00
PART NO. FX23L-120P-0.5SV8
CODE NO. CL573-2006-9-00
2 1/1

FORM HC0011-5-7