Apr.1.2024 Copyright 2024 HIROSE ELECTRIC CO., LTD. All Rights Reserved.
In case of consideration for using Automotive equipment / device which demand high reliability, kindly contact our sales window correspondents.

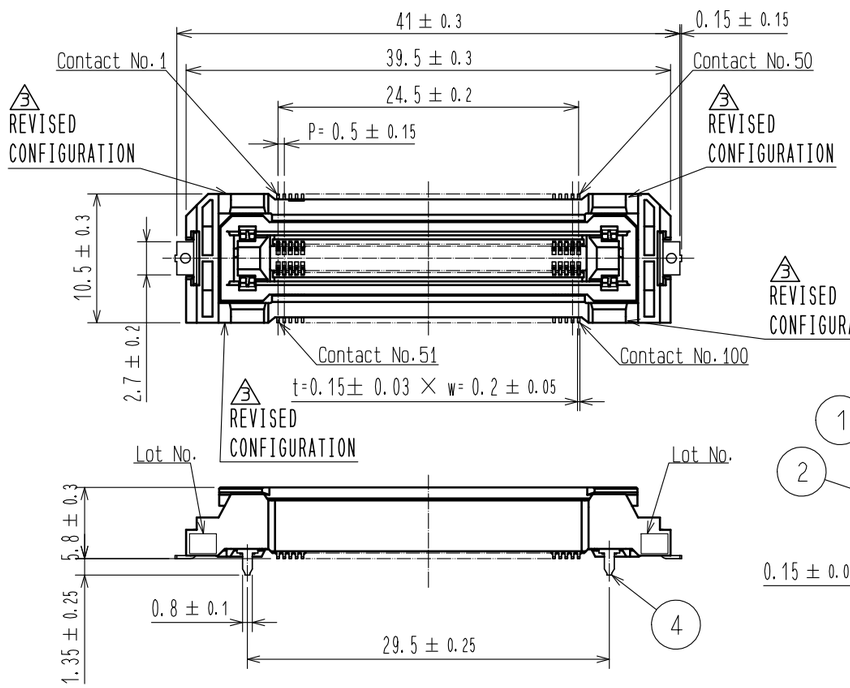

RECOMMENDED LAND PATTERN DIMENSION OF PCB
(PCB THICKNESS: t=1.6mm)

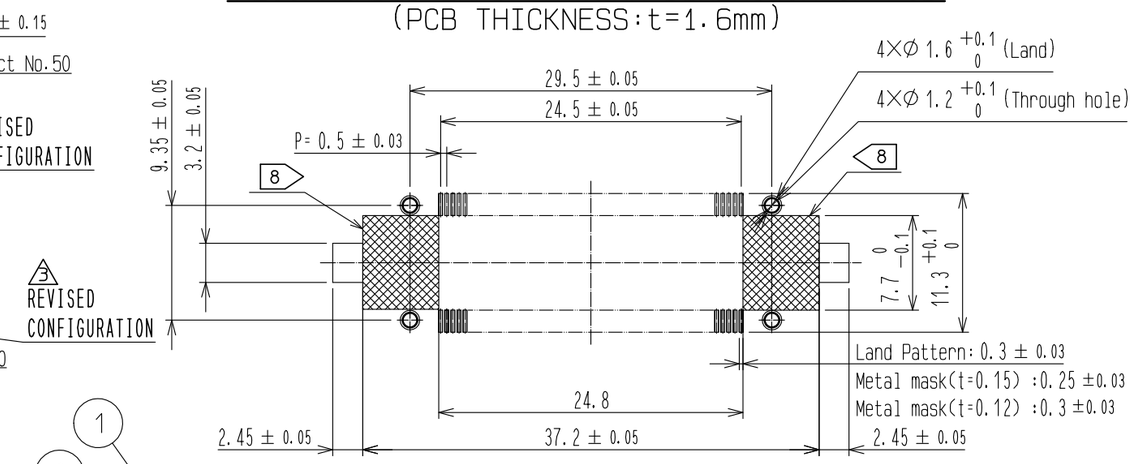

3 FLOATING RANGE

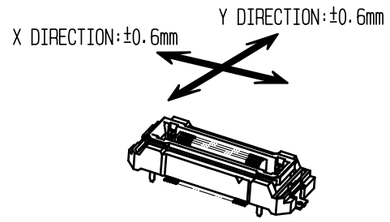

2 CROSS SECTION OF MATING
(No scale)

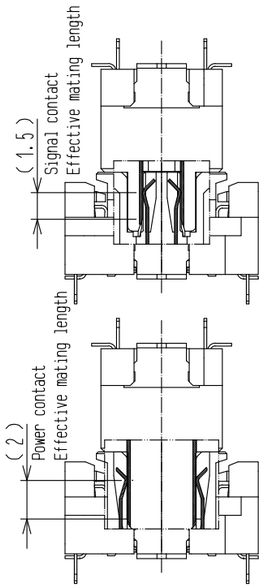

7 PCB DISTANCE (No scale)

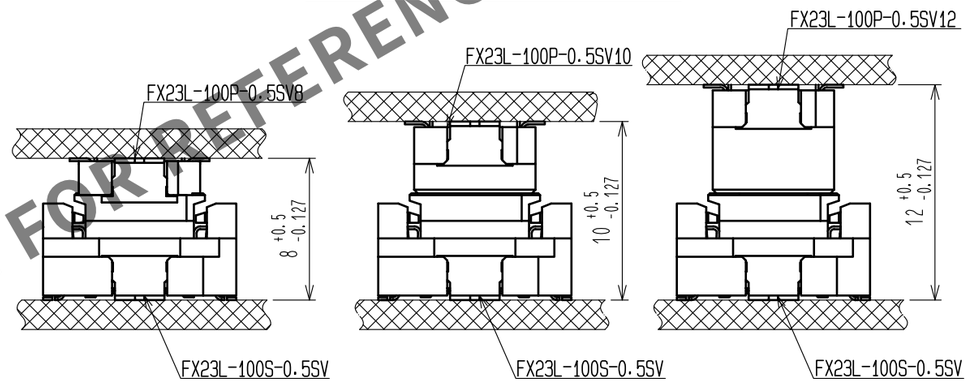

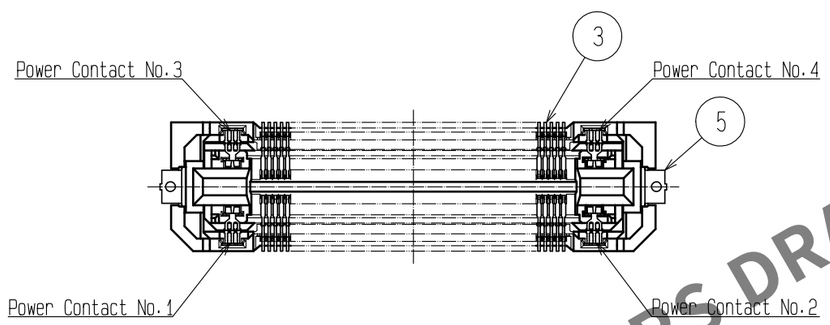

Note
1 Lead CO-Planarity is 0.1mm MAX.
2 This is packaged in tray. (50pcs/tray)
3 Floating range of this connector is ±0.6mm MAX.
The maximum cycle time of the floating operation is in accordance with the mating cycle of the connector.
4 It shows the vacuum pickup area. Remove the mylar tape before mating connectors.
5 Blemish and hit mark can be occured through out the manufacturing process which doesn't affect quality level.
6 The dimensions in parentheses are for references.
7 Please use the connectors within the specified PCB distance.
8 ▩ area of inner SMT land requires pattern prohibition or resist treatment to prevent the pattern.

2 DRAWING FOR PACKING (No scale)

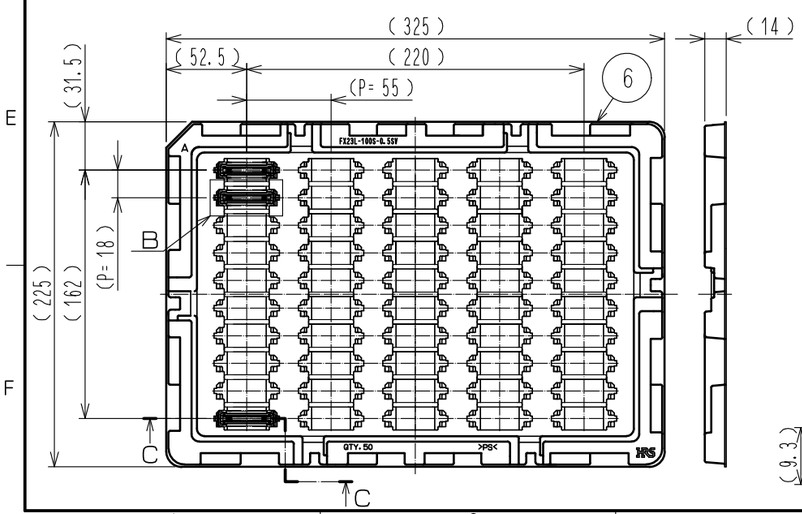

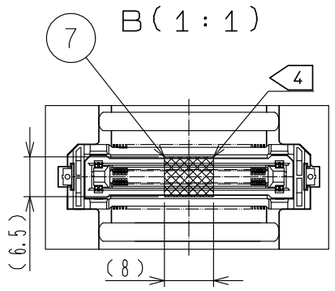

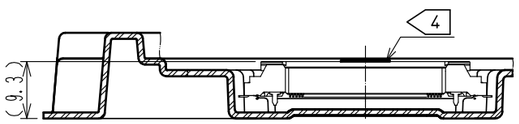

NO.	MATERIAL	FINISH , REMARKS	NO.	MATERIAL	FINISH , REMARKS
			7	POLYIMIDE 1	(TAPE FOR VACUUM PICKUP)
3	COPPER ALLOY	CONTACT AREA: GOLD 0.1μm	6	POLYSTYRENE	(TRAY)
		LEAD AREA: GOLD 0.03μm	5	BRASS	TIN-PLATING 1μm
		UNDER PLATING: NICKEL 1.3μm	4	COPPER ALLOY	CONTACT AREA: GOLD 0.1μm
2	POLYAMIDE	BLACK UL94V-0			LEAD AREA: TIN-PLATING 1μm
1	POLYAMIDE	BLACK UL94V-0			UNDER PLATING: NICKEL 1.3μm

UNITS	SCALE	COUNT	DESCRIPTION OF REVISIONS	DESIGNED	CHECKED	DATE
mm	2 : 1	3 4	DIS-F-00007440	TY. EDAGAWA	MK. NAGATA	20201221

HIROSE ELECTRIC CO., LTD.

APPROVED	: HS. OKAWA	20160120	DRAWING NO.	EDC-358068-00-00
CHECKED	: KN. SHIBUYA	20160120	PART NO.	FX23L-100S-0.5SV
DESIGNED	: TS. OONO	20160120	CODE NO.	CL0573-2305-0-00
DRAWN	: TS. OONO	20160120		3 1/1

HRS DRAWING FOR REFERENCE