Jun.1.2024 Copyright 2024 HIROSE ELECTRIC CO., LTD. All Rights Reserved.
In case of consideration for using Automotive equipment / device which demand high reliability, kindly contact our sales window correspondents.

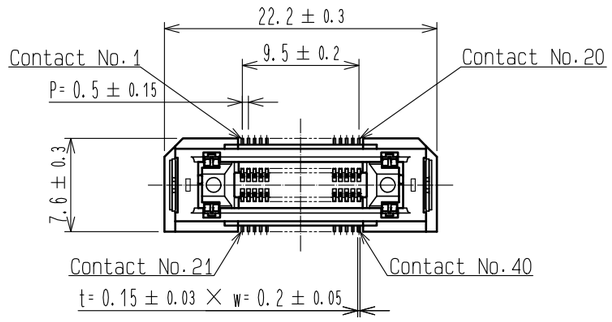

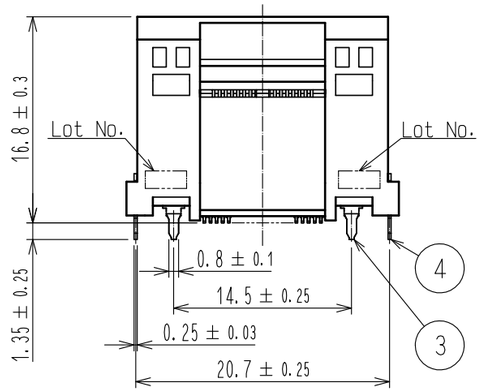

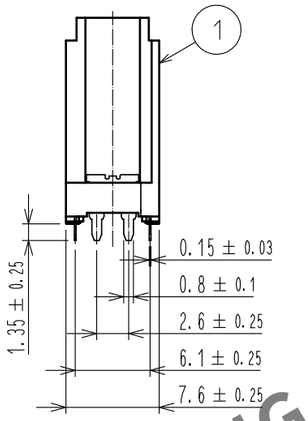

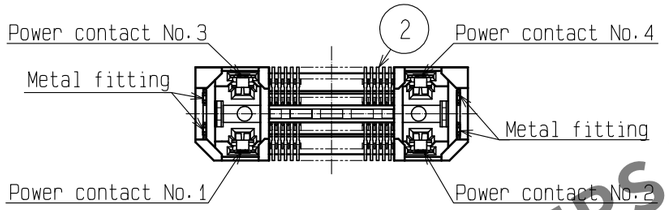

RECOMMENDED LAND PATTERN DIMENSION OF PCB
(PCB THICKNESS: t=1.6mm)

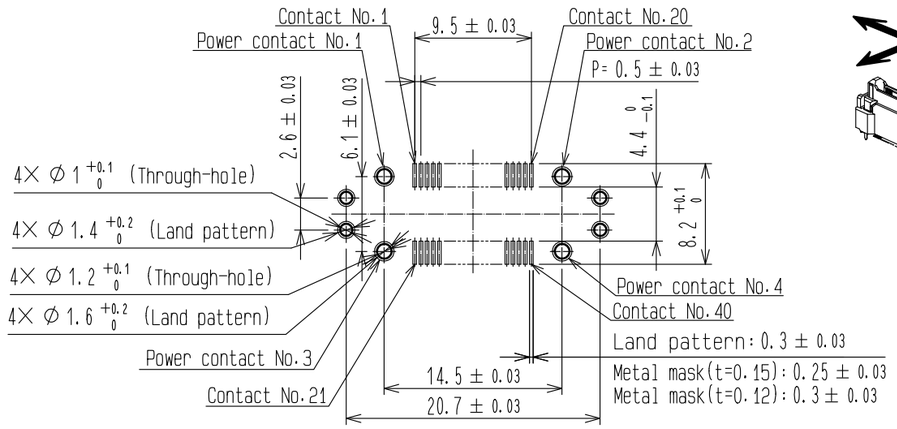

3 FLOATING RANGE

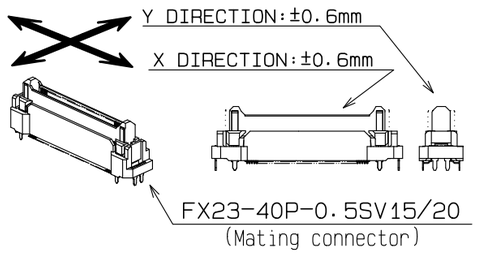

PCB DISTANCE (No scale)

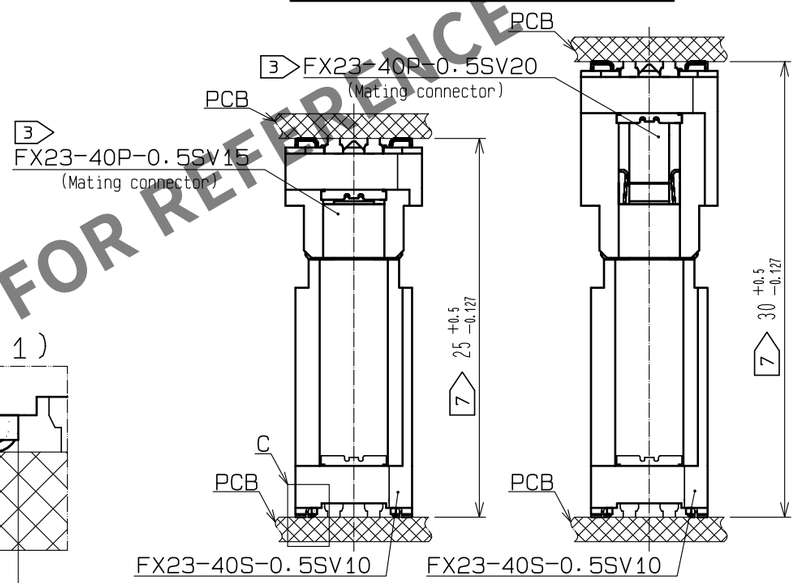

CROSS SECTION OF MATING
(No scale)

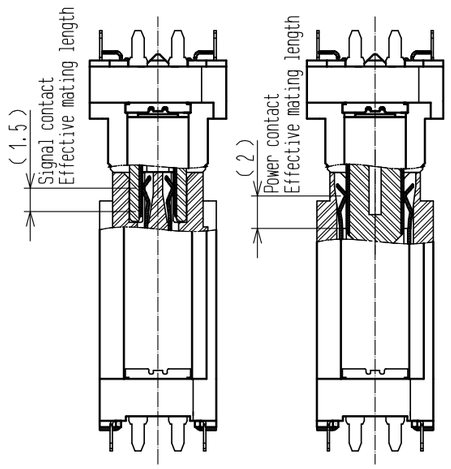

C (10 : 1)

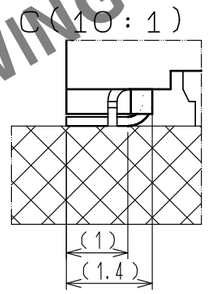

2 DRAWING FOR PACKING (No scale)

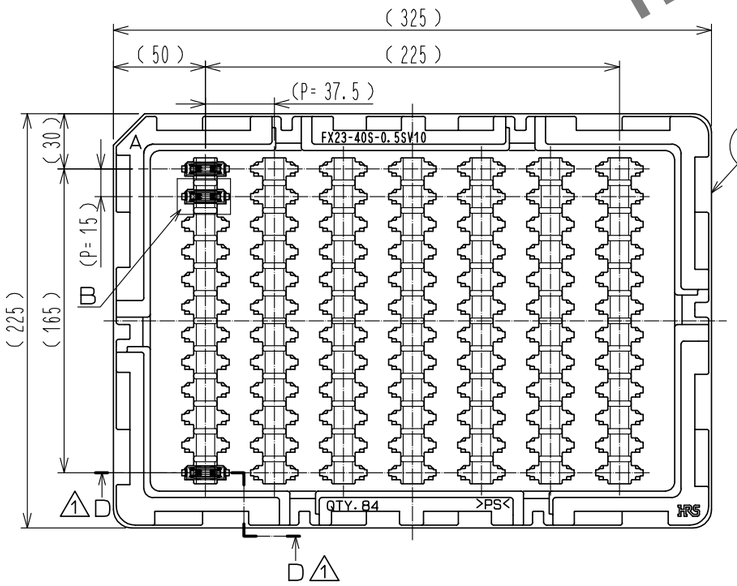

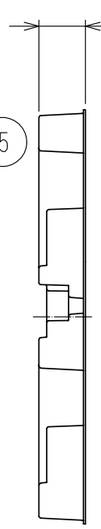

B (1 : 1)

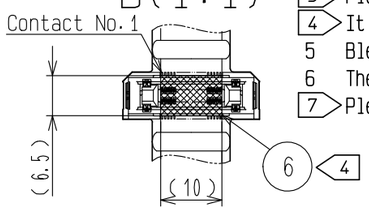

1 D−D (1 : 1)

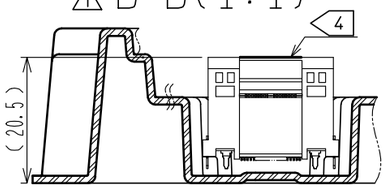

1 Lead CO-Planarity is 0.1mm MAX.
2 This is packaged in tray. (84pcs/tray)
3 Floating range of this connector is ±0.6mm MAX.
4 It shows the vacuum pickup area. Remove the mylar tape before mating connectors.
5 Blemish and hit mark can be occured through out the manufacturing process which doesn't affect quality level.
6 The dimensions in parentheses are for references.
7 Please use the connectors within the specified PCB distance.

NO.	MATERIAL	FINISH , REMARKS
2	COPPER ALLOY	CONTACT AREA: GOLD 0.1μm LEAD AREA: GOLD 0.03μm UNDER PLATING: NICKEL 1.3μm
1	LCP	BLACK UL94V-0

NO.	MATERIAL	FINISH , REMARKS
6	POLYIMIDE	(TAPE FOR VACUUM PICKUP)
5	POLYSTYRENE	(TRAY)
4	BRASS	LEAD AREA: TIN-PLATING 3μm UNDER PLATING: NICKEL 1μm
3	COPPER ALLOY	CONTACT AREA: GOLD 0.1μm LEAD AREA: TIN-PLATING 1μm UNDER PLATING: NICKEL 1.3μm

UNITS	SCALE		COUNT	DESCRIPTION OF REVISIONS	DESIGNED	CHECKED	DATE
mm	2 : 1	3	2	DIS-F-00006109	AK. IWAHORI	HT. YAMAGUCHI	20200522

HIROSE ELECTRIC CO., LTD.

APPROVED	: HS. OKAWA	20150523	DRAWING NO.	EDC-353559-00-00
CHECKED	: KN. SHIBUYA	20150523	PART NO.	FX23-40S-0.5SV10
DESIGNED	: TS. OONO	20150523	CODE NO.	CL573-3302-7-00
DRAWN	: TS. OONO	20150523		3 1/2

HRS DRAWING FOR REFERENCE

Jun.1.2024 Copyright 2024 HIROSE ELECTRIC CO., LTD. All Rights Reserved.
In case of consideration for using Automotive equipment / device which demand high reliability, kindly contact our sales window correspondents.

In order to prevent any potential failures with the connector, please read the following below:

[Through Hole Reflow Process]

FX23 and FX23L Series use through hole reflow process, where power contacts/metal fittings draw solder paste from the surrounding area. In regards to the soldering paste print area, the surface shall be flat with no exposed copper surface. If the surface is not flat, power contacts/metal fittings may not properly draw the soldering paste, resulting insufficient solder on the power contacts/metal fittings as well as ball-shaped solder on the PCB.

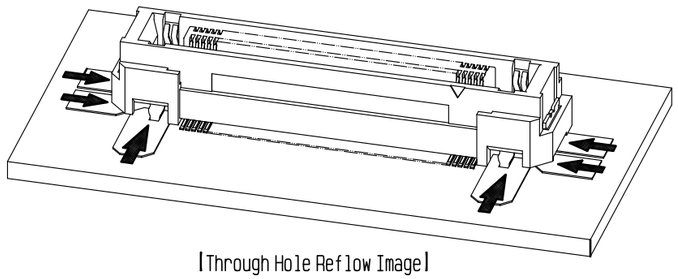

[Through Hole Reflow Image]

When applying solder from the opposite side of the PCB, due to the unavailability in solder space on the mounting side, there may be a case where solder is insufficiently applied to power contacts/metal fittings. Please check if the power contacts/metal fittings are properly soldered when doing so.

[Board Stabilization]

This connector can absorb misalignment of boards but cannot absorb vibration itself. When boards are supported by a connector only, the connector will be loaded excessively, which may result in a damage or contact failure. Take measures to secure boards with an object other than connector as shown in the following figure.

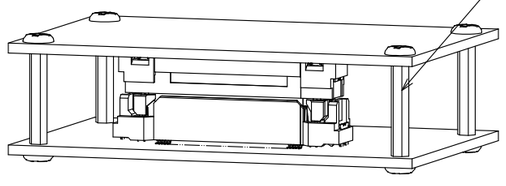

[Parallel Connection]

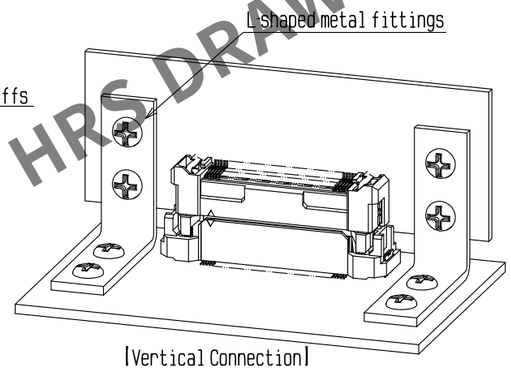

[Vertical Connection]

Note that when A spacer is installed far from connectors, incomplete mating of the connectors may occur due to sagging of the board, etc. Mate connectors surely and then fix a spacer.

[When Storing with Tray Packaging]

Please be cautious when stacking trays when storing. There are two types of trays (tray A, tray B), and designed to stack alternatingly.

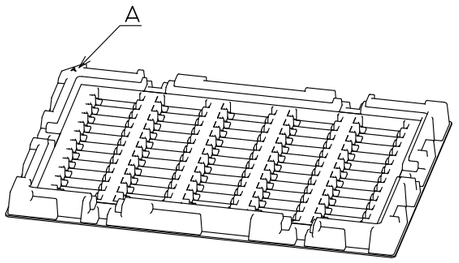

[Tray A]

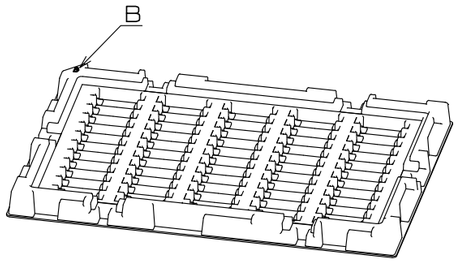

[Tray B]

If tray A is stacked to another tray A or tray B is stacked to another tray B, load may applied to the connector, causing the deformation or breakage of the connector.

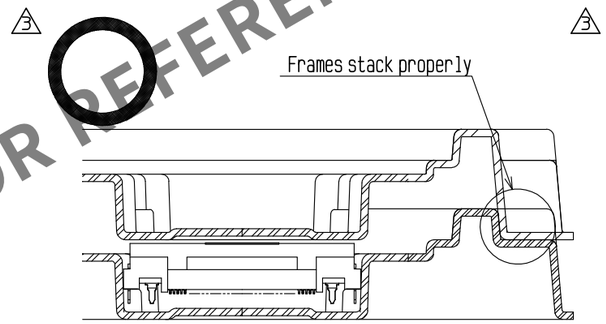

If the tray is stacked correctly, tray's frame prevents from upper tray applying force to the conncetor on bottom tray.

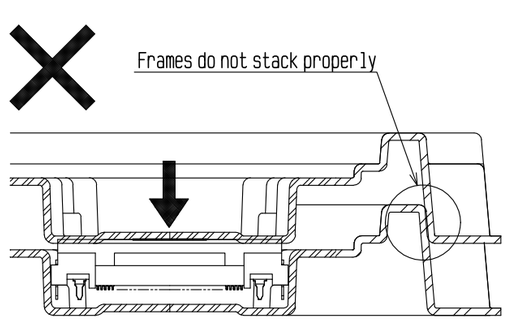

If same type of tray is stacked on top of eachother, load will be directly applied to the connector.

When storing, please stack the trays alternatively (tray A, tray B, tray A, tray B, tray A....)

[In Regards to Design Guideline]

To provide more information in regards to the usage of this product, we have prepared a detailed manual (ETAD-F0887-00). Please contact our sales representative if needed.

HRS DRAWING FOR REFERENCE

2 Added the second page.

HRS	DRAWING NO.	EDC-353559-00-00
	PART NO.	FX23-40S-0.5SV10
	CODE NO.	CL573-3302-7-00

3 2/2