Apr.1.2024 Copyright 2024 HIROSE ELECTRIC CO., LTD. All Rights Reserved.
In case of consideration for using Automotive equipment / device which demand high reliability, kindly contact our sales window correspondents.

	COUNT	DESCRIPTION OF REVISIONS	BY	CHKD	DATE		COUNT	DESCRIPTION OF REVISIONS	BY	CHKD	DATE
1	1	DIS-F-000562	K.S.	H.Y	05./0.31						. .
					. .						. .
					. .						. .

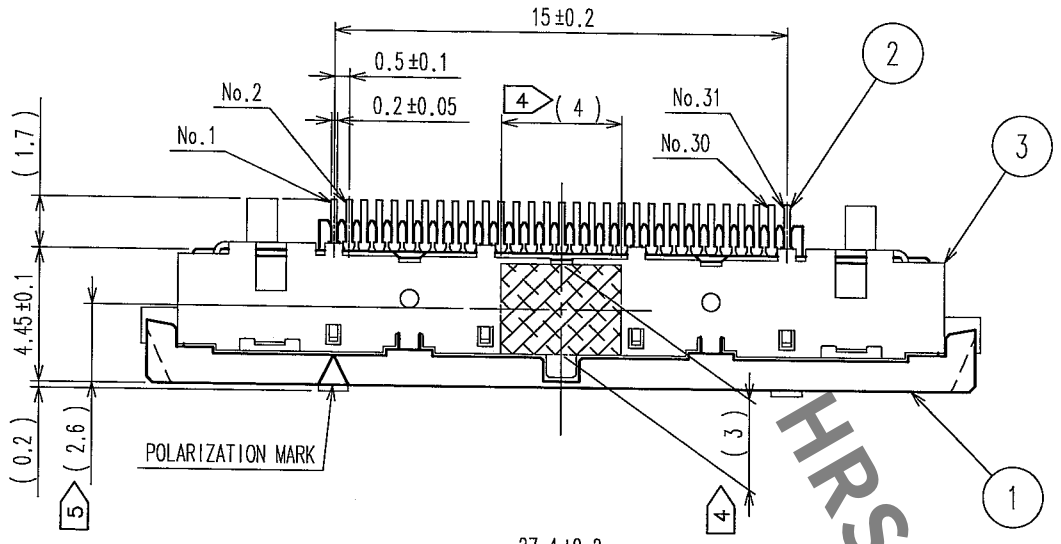

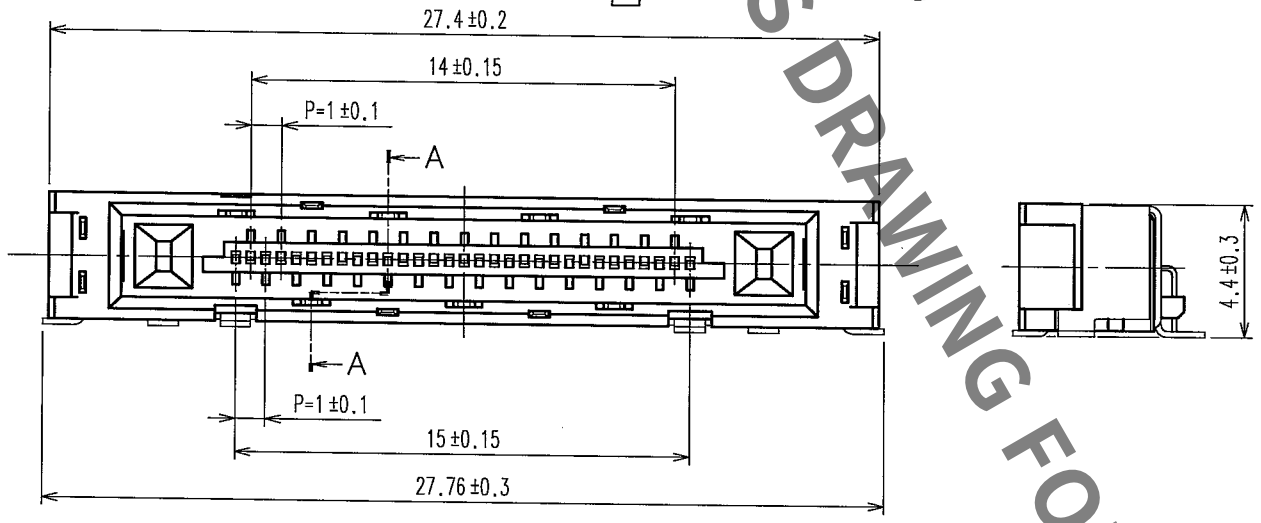

RECOMMENDED LAND PATTERN DIMENSION OF P.C.B

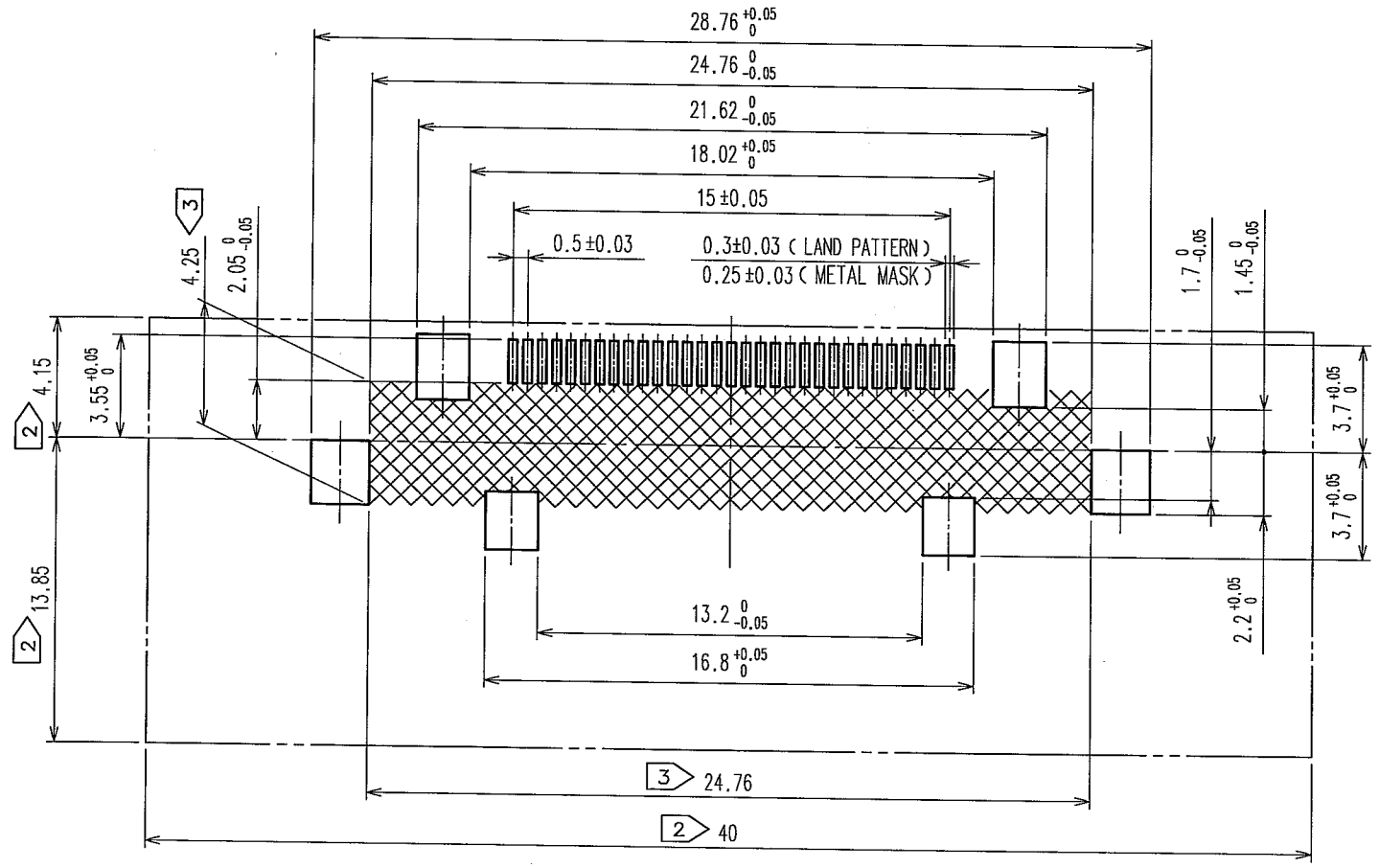

AA(10:1) 1

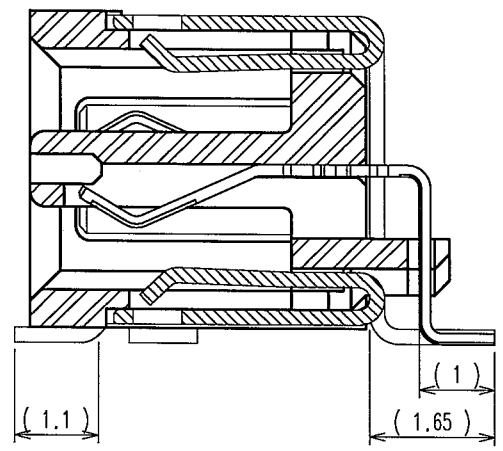

NOTE
1 LEAD-COPLANARITY OF THIS PRODUCT TO BE 0.1MAX FOR SMT LEAD AND 0.15MAX FOR GROUND PLATE LEAD.
2 DO NOT MOUNT OTHER DEVICES ONTO ▭ AREA, OR MATINGPAIR CANNOT BE MATED AND OPERATED THE LOCK PARTS.
3 ▨ AREA OF INNER SMT LAND REQUIRES PATTERN PROHIBITION OR RESIST TREATMENT TO PREVENT THE PATTERN TOUCHING TO THE CONTACTS.
4 ▨ AREA IS VACUUM PICKUP AREA FOR REFERENCE.
5 THE DIMENSION IS THE CENTER OF VACUUM PICKUP AREA.
6 THE DIMENSIONS IN PARENTHESES ARE FOR REFERENCE.
7 PACKAGING FOR THIS PRODUCT APPLIES EMBOSSED CARRIER TAPE PACKAGING. SEE SHEET 2/2 FOR DETAILS.

NO.	MATERIAL	FINISH, REMARKS	NO.	MATERIAL	FINISH, REMARKS
3	NICKEL SILVER		2	PHOSPHOR BRONZE	CONTACT AREA:GOLD 0.1μm min
1	PA	BLACK UL94V-0			LEAD AREA:TIN-PLATING 1μm min
					UNDER PLATING:NICKEL 0.5μm min

CODE NO.(OLD)	DRAWN	DESIGNED	CHECKED	APPROVED	RELEASED
CL	K.SHIBUYA 05.08.04	K.SHIBUYA 05.08.04	H.YAMAGUCHI 05.08.05	H.OKAWA 05.08.05	. .

SCALE 4 : 1
UNITS mm
DRAWING NO. EDC3-155934
HRS HIROSE ELECTRIC CO., LTD
PART NO. FX15S-31S-0.5SH
CODE NO. CL575-2306-5
1/2

TO

HRS DRAWING FOR REFERENCE

Apr.1.2024 Copyright 2024 HIROSE ELECTRIC CO., LTD. All Rights Reserved.
In case of consideration for using Automotive equipment / device which demand high reliability, kindly contact our sales window correspondents.

	COUNT	DESCRIPTION OF REVISIONS	BY	CHKD	DATE		COUNT	DESCRIPTION OF REVISIONS	BY	CHKD	DATE
△					. .	△					. .
△					. .	△					. .
△					. .	△					. .

THE DIRECTION OF PULLING OUT

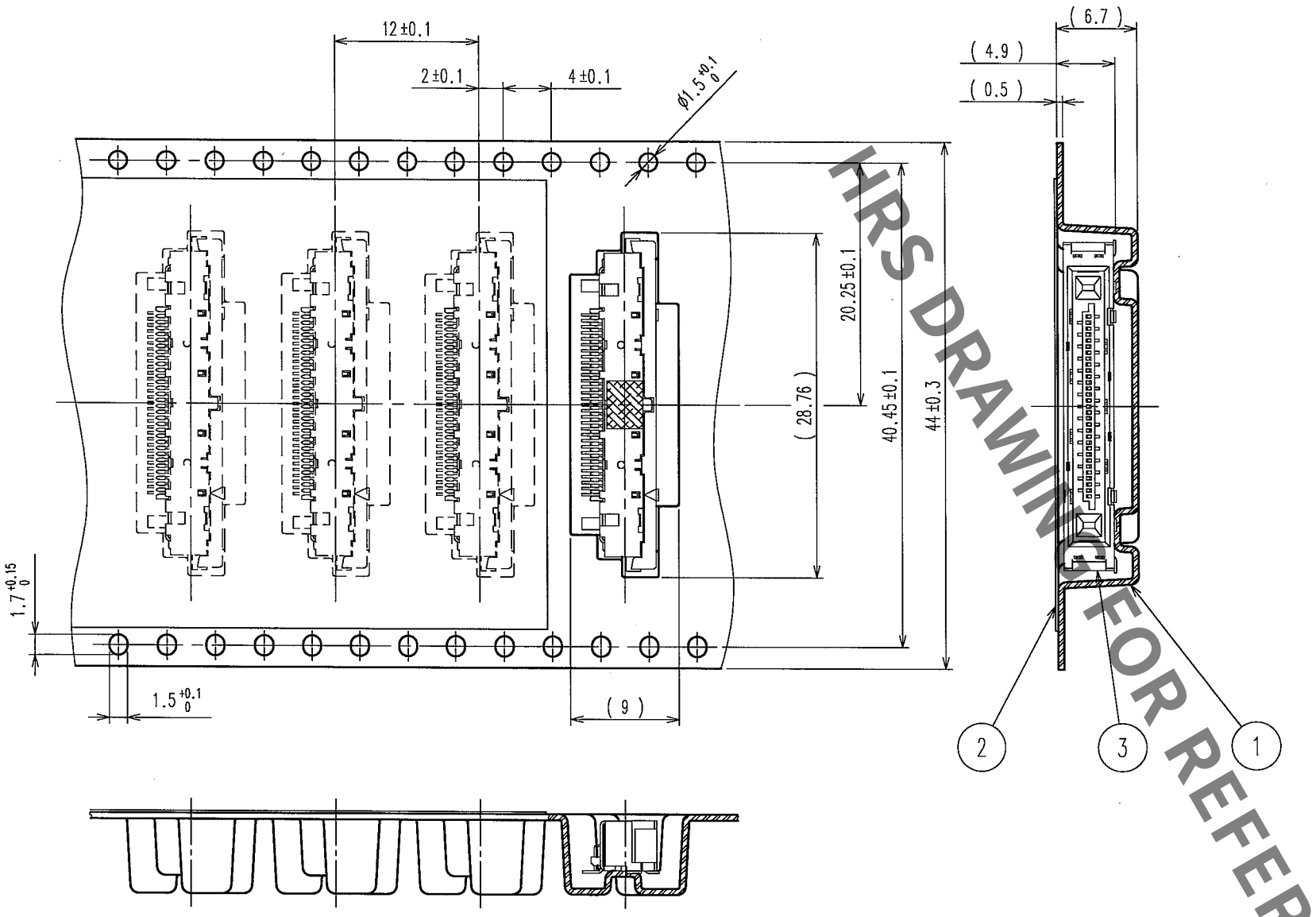

REELED DIMENSION (FREE)

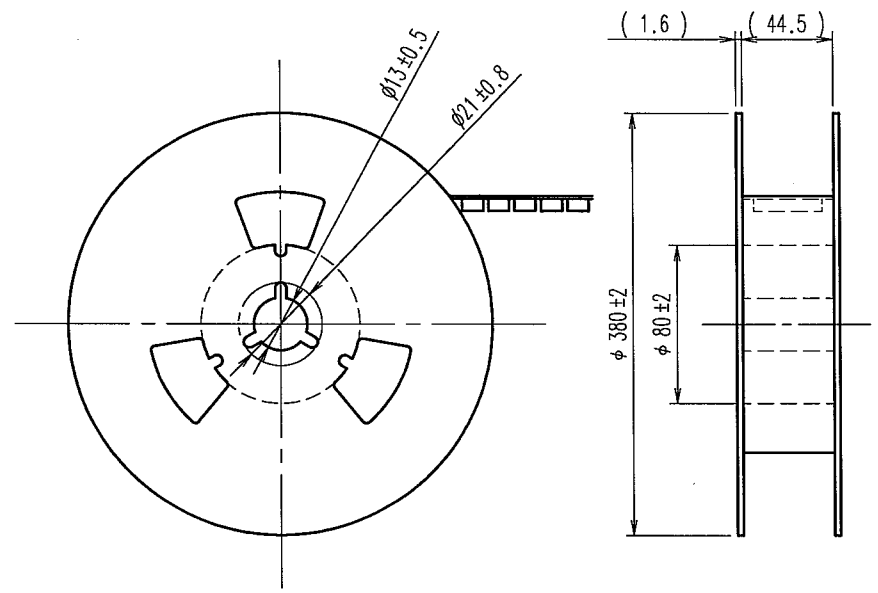

HRS DRAWING FOR REFERENCE

NOTE 1. 1 REEL : 1000 CONNECTORS.

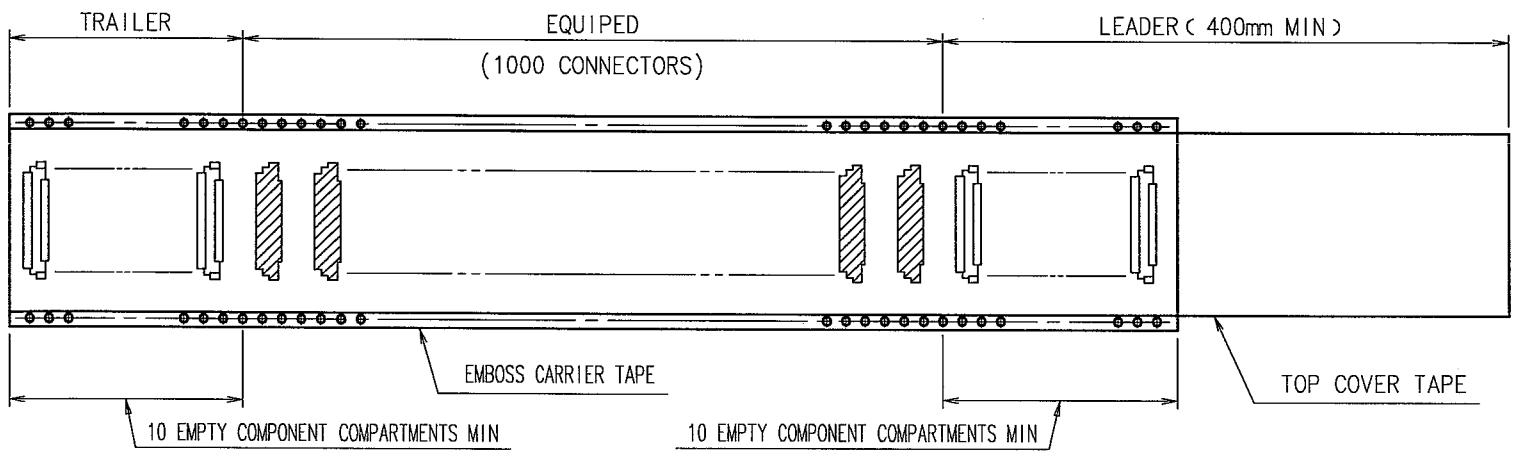

NO.	MATERIAL	FINISH, REMARKS	NO.	MATERIAL	FINISH, REMARKS
1	PS	EMBOSS CARRIER TAPE	2	POLYESTER	TOP COVER TAPE
			3	———	CONNECTOR

CODE NO.(OLD)	DRAWN	DESIGNED	CHECKED	APPROVED	RELEASED
CL	K.SHIBUYA 05.08.04	K.SHIBUYA 05.08.04	H.YAMAGUCHI 05.08.05	H.OKAWA 05.08.05	. .

SCALE 2 : 1
UNITS mm

DRAWING NO. EDC3-155934

HRS HIROSE ELECTRIC CO., LTD

PART NO. FX15S-31S-0.5SH

CODE NO. CL575-2306-5

2

TO

FORM NO.229