Jun.1.2025 Copyright 2025 HIROSE ELECTRIC CO., LTD. All Rights Reserved.
In case of consideration for using Automotive equipment / device which demand high reliability, kindly contact our sales window correspondents.

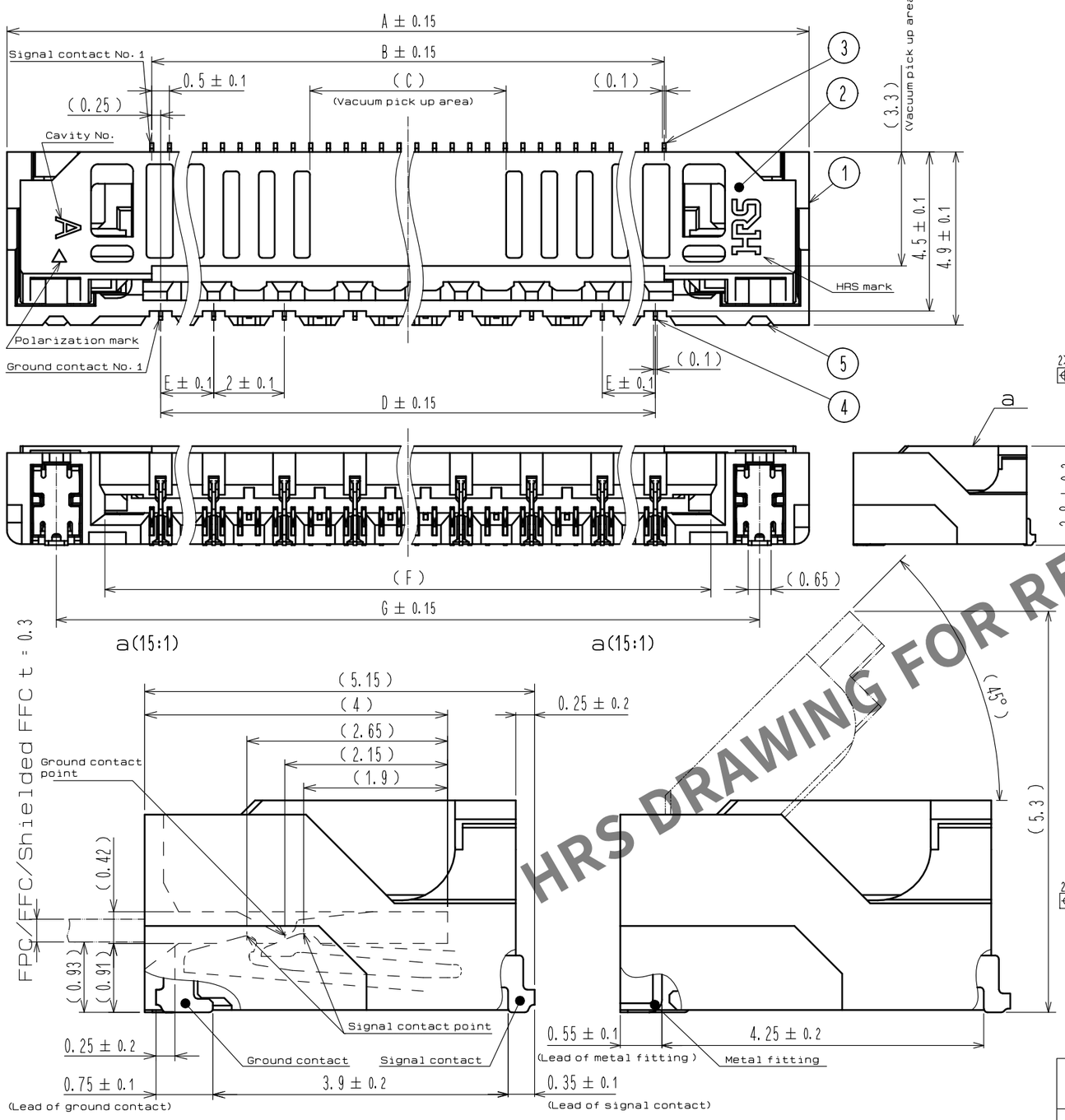

Recommended PCB mounting pattern

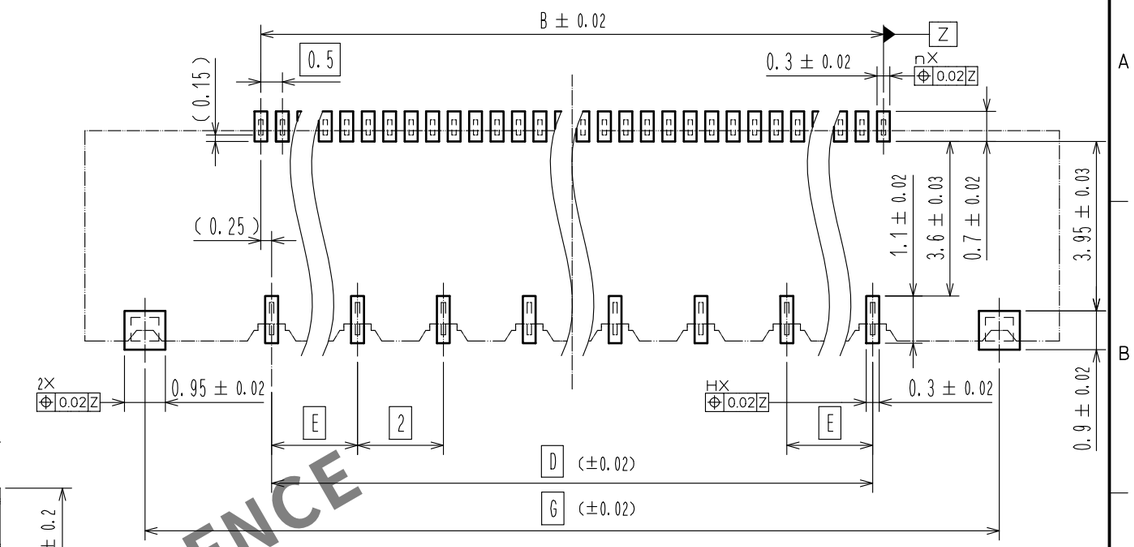

Recommended stencil pattern

(Recommended stencil thickness : t=0.12)

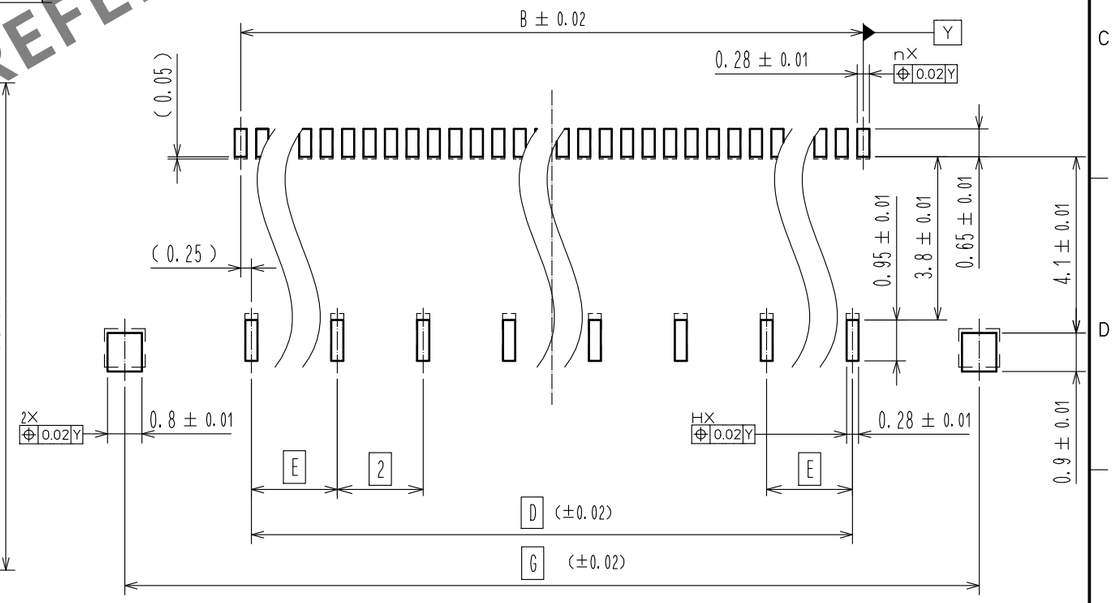

HRS DRAWING FOR REFERENCE

Notes
1. The dimension in parentheses are for reference.
2. Lead co-planarity including reinforced metal fittings shall be 0.1 max.
3. To be delivered with tape and reel packaging.
   See attached packaging specification for details.
4. Note that preventive hole for sink mark, lighting hole,
   or slit could be added for improvement.
5. The quality remains good, even with the dark spots,
   which could occasionally occur on molded plastic.
6. This product satisfies halogen free requirements defined as 900 ppm maximum chlorine,
   900 ppm maximum bromine and 1500 ppm maximum total of chlorine and bromine.
7. 'n' represents the number of contacts.

NO.	MATERIAL	FINISH , REMARKS	NO.	MATERIAL	FINISH , REMARKS
4	Copper alloy	Tin plating (reflow finished) 1μm MIN and copper (interlayer) 0.15μm MIN over nickel 1μm MIN	9	(Connector)	
			8	Polystyrene	
3	Copper alloy	Contact area, lead: Gold plating 0.03μm MIN over nickel 1μm MIN. Other: Nickel plating 1μm MIN.	7	Polyester	
			6	Polystyrene	
2	LCP	BLACK	5	Stainless steel	Tin plating (reflow finished) 1μm MIN over nickel 0.2μm MIN.
1	LCP	BLACK			

UNITS	SCALE		COUNT	DESCRIPTION OF REVISIONS	DESIGNED	CHECKED	DATE
mm	7 : 1	4	2	DIS-F-00022909	ZHANG QIYUE	HS. HIRAHARA	20250508

HRS HIROSE ELECTRIC CO., LTD.

APPROVED	: KN. SHIBUYA	20231207	DRAWING NO.	EDC-388109-01-00
CHECKED	: HS. HIRAHARA	20231207	PART NO.	FH63S-**S-0.5SH(01)
DESIGNED	: TA. SUZUKI	20231207	CODE NO.	CL0580
DRAWN	: TA. SUZUKI	20231207		4 1/8

FORM HC0011-5-7

Jun.1.2025 Copyright 2025 HIROSE ELECTRIC CO., LTD. All Rights Reserved.
In case of consideration for using Automotive equipment / device which demand high reliability, kindly contact our sales window correspondents.

Recommended FPC

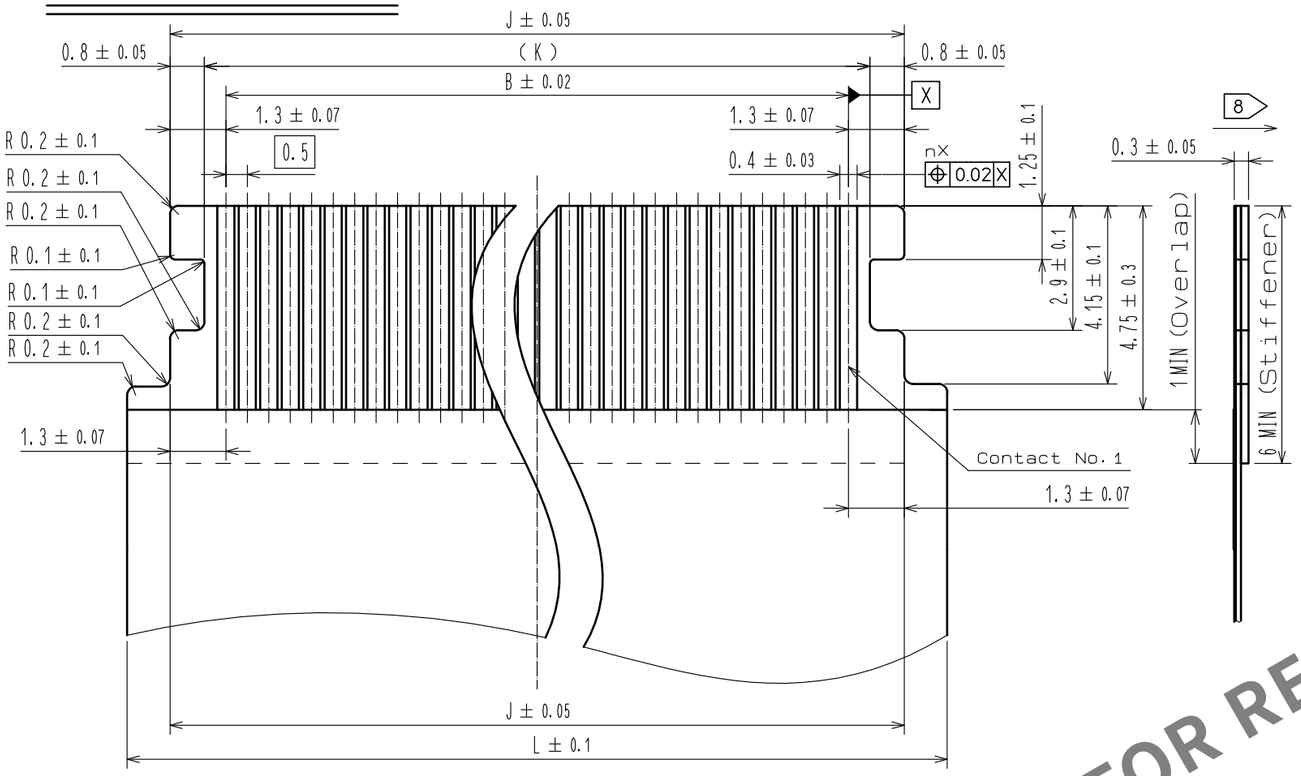

FPC/FFC/shielded FFC configuration (Reference example)

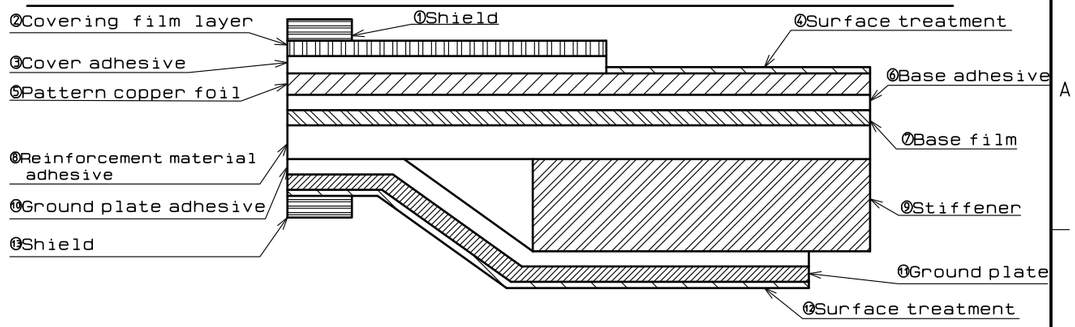

	Material name	FPC Material	FPC Thickness (μm)	FFC Material	FFC Shield FFC Thickness (μm)	FFC FFC Thickness (μm)
①	Shield	—	—			—
②	Covering film layer	Polyimide 1mil	25	Polyester type	12	12
③	Cover adhesive	Heat-hardened adhesive	25	Adhesive	30	30
④	Surface treatment	1μm to 6μm nickel underplated 0.2μm gold plated	(3.7)	0.5μm to 5μm nickel underplated 0.05μm to 0.5μm gold plated	(3.275)	(3.275)
⑤	Pattern copper foil	Cu 1 oz	35	Soft copper film	35	35
⑥	Base adhesive	Heat-hardened adhesive	25	Adhesive	15	30
⑦	Base film	Polyimide 1mil	25	Polyester type	12	12
⑧	Reinforcement material adhesive	Heat-hardened adhesive	30	Adhesive	30	30
⑨	Stiffener	Polyimide 8mil	175	Polyester type	150	188
⑩	Ground plate adhesive	—	—	Adhesive	15	—
⑪	Ground plate	—	—	Copper film Tin plating 1μm to 5μm	37	—
⑫	Surface treatment	—	—			
⑬	Shield	—	—			—

Recommended FFC/shielded FFC

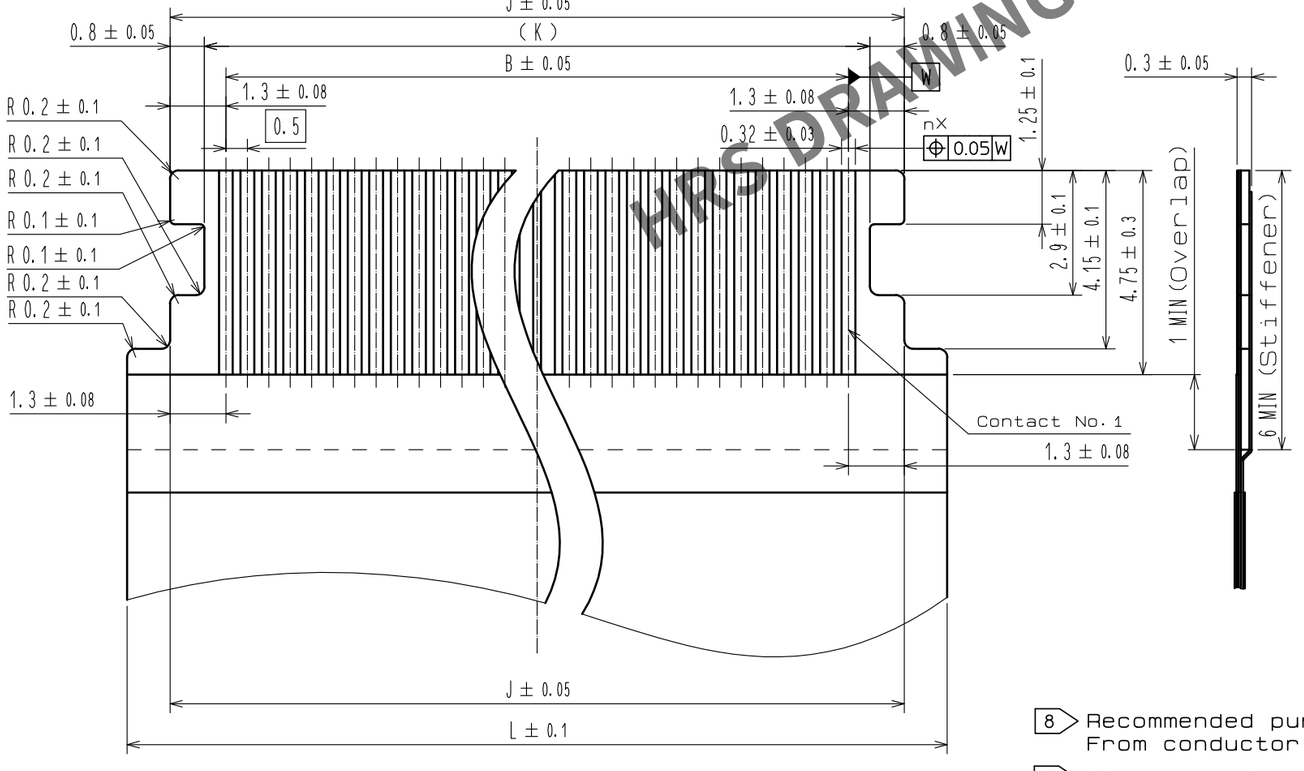

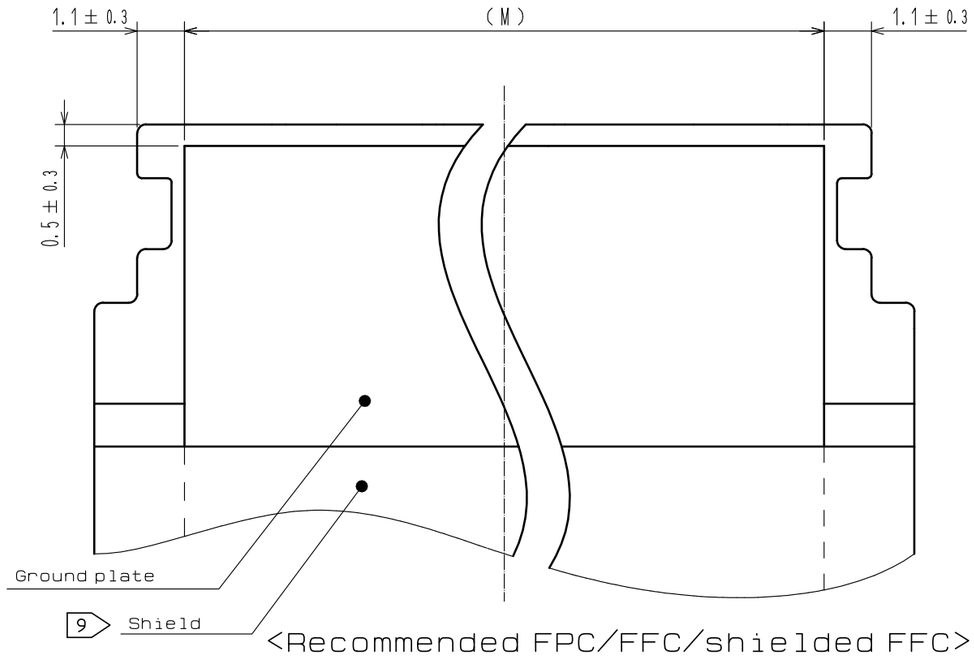

<Recommended FPC/FFC/shielded FFC>

8 Recommended puncher direction:
From conductor side to stiffener side.

9 Please overlap shield area on ground plate .

HRS DRAWING FOR REFERENCE

DRAWING NO.	EDC-388109-01-00
PART NO.	FH63S-**S-0.5SH(01)
CODE NO.	CL0580

4 2/8

Jun.1.2025 Copyright 2025 HIROSE ELECTRIC CO., LTD. All Rights Reserved.
In case of consideration for using Automotive equipment / device which demand high reliability, kindly contact our sales window correspondents.

Embossed carrier tape dimension (2:1)

■TAPE WIDTH:24mm MAX

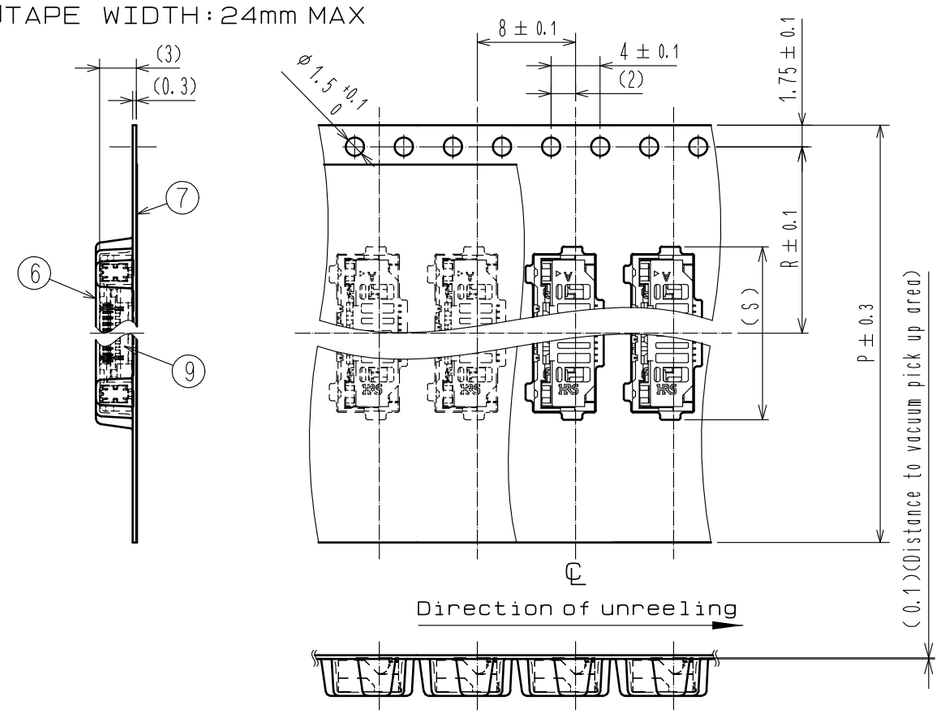

■TAPE WIDTH:32mm MIN

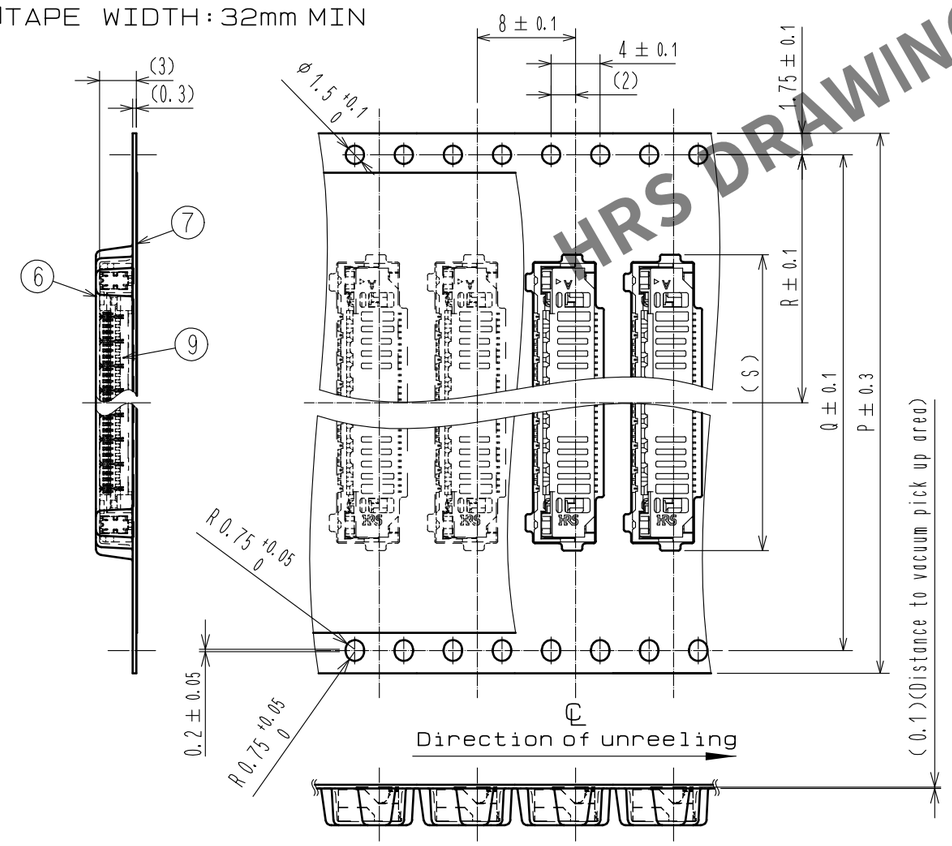

Reel dimension (No scale)

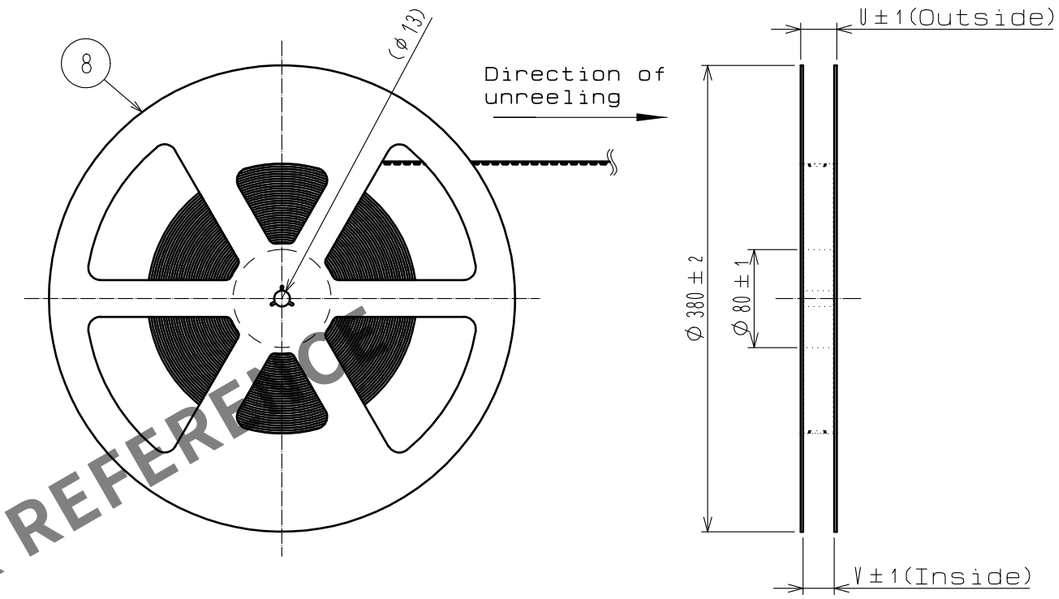

Leader, Trailer dimension (No scale)

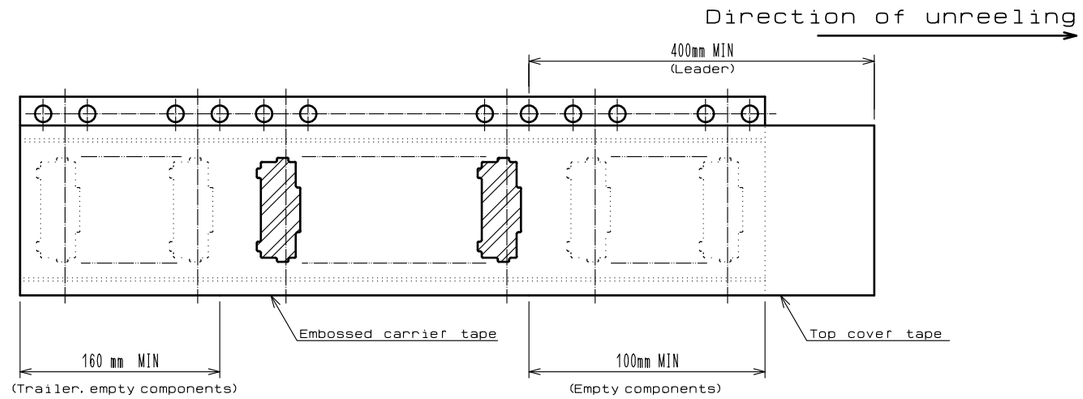

Notes
10 Packing quantity ④
1pos~40pos : 3500pcs/reel
42pos~50pos : 2000pcs/reel
52pos~60pos : 1500pcs/reel
11 Refer to JIS C 0806 and IEC 60286-3.
(Packaging of components for automatic handling)

<Packing specification>

HRS DRAWING FOR REFERENCE

HRS	DRAWING NO.	EDC-388109-01-00
	PART NO.	FH63S-**S-0.5SH(01)
	CODE NO.	CL0580 ④ 3/8

Jun.1.2025 Copyright 2025 HIROSE ELECTRIC CO., LTD. All Rights Reserved.
In case of consideration for using Automotive equipment / device which demand high reliability, kindly contact our sales window correspondents.

Part No.	Number of contacts	Dimension of connector , PCB mounting pattern , metal mask , FPC , FFC , and shielded FFC												Dimension of drawing for packing						Packing quantity
		A	B	C	D	E	F	G	H	J	K	L	M	P	Q	R	S	U	V	
FH63S-10S-0.5SH(01)	10	12.7	4.5	5.55	4	2	7.15	9.9	3	7.1	5.5	9.1	4.9	24	–	11.5	14.1	29.4	25.4	3500pcs/reel
FH63S-20S-0.5SH(01)	20	17.7	9.5	6.55	9	1.5	12.15	14.9	6	12.1	10.5	14.1	9.9	32	28.4	14.2	19.1	37.4	33.4	
FH63S-30S-0.5SH(01)	30	22.7	14.5	5.55	14	2	17.15	19.9	8	17.1	15.5	19.1	14.9	44	40.4	20.2	24.1	49.4	45.4	
FH63S-40S-0.5SH(01)	40	27.7	19.5	10.55	19	1.5	22.15	24.9	11	22.1	20.5	24.1	19.9	44	40.4	20.2	29.1	49.4	45.4	
FH63S-50S-0.5SH(01)	50	32.7	24.5	15.55	24	2	27.15	29.9	13	27.1	25.5	29.1	24.9	56	52.4	26.2	34.1	61.4	57.4	2000pcs/reel
FH63S-60S-0.5SH(01)	60	37.7	29.5	20.55	29	1.5	32.15	34.9	16	32.1	30.5	34.1	29.9	56	52.4	26.2	39.1	61.4	57.4	1500pcs/reel △4

※60pos are currently under planning.
Please contact HIROSE for detailed information.

HRS DRAWING FOR REFERENCE

<Dimension table>

DRAWING NO.	EDC-388109-01-00
PART NO.	FH63S-**S-0.5SH(01)
CODE NO.	CL0580 △4 4/8

Jun.1.2025 Copyright 2025 HIROSE ELECTRIC CO., LTD. All Rights Reserved.
In case of consideration for using Automotive equipment / device which demand high reliability, kindly contact our sales window correspondents.

This connector requires delicate and careful handling.
To prevent connector/FPC breakege and contact failure (mating failure, FPC pattern breakage, etc),
read through the instructions shown below and handle the connector properly.
This instruction manual is applicable to usage with FPC/FFC/shielded FFC .

[Connector part nomenclature]

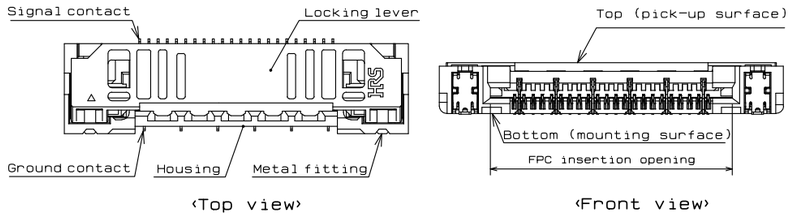

[Operation and precautions]

1. Initial condition
   The product is supplied with the locking lever closed.
   Locking lever does not have to be operated before inserting FPC .

   [Caution]
   - Do not insert FPC or operate locking lever before mounting (Example 1).

Example 1)

NG

Connector operation in unmounted state

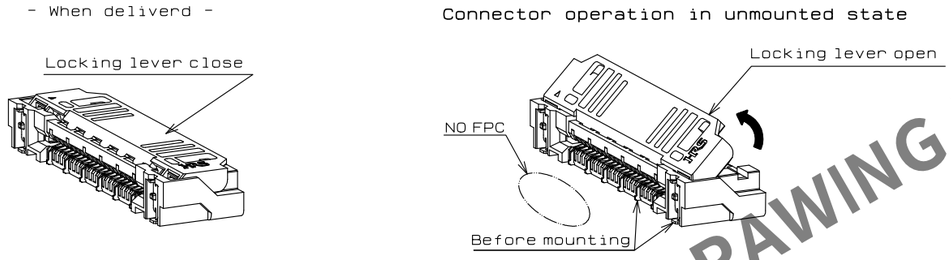

2. How to insert FPC
   Insert the FPC into the connector opening horizontally to the PCB surface (Example 2).
   Insert it properly to the very end.

   [Caution]
   - Make sure the locking lever is closed when inserting the FPC.
     Do not insert the FPC when the locking lever is open (Example 3) .
   - Do not insert the FPC when the locking lever is pressed from above a finger.(Example 4) .
   - Align both sides of FPC horizotally to the sides of
     the connector opening and insert straight forward.
   - Do not twist the FPC to up and down or right and left or an angle(Example 5, 6).

Example 2)

OK

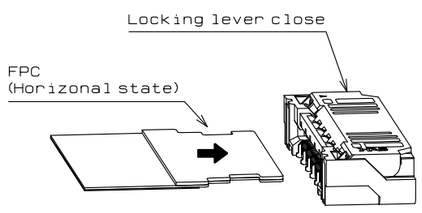

OK

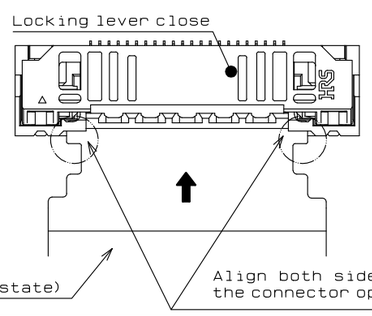

Example 3)

NG

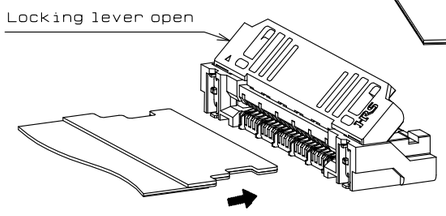

Example 4)

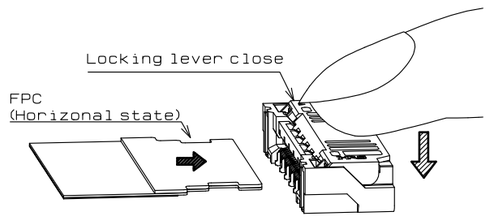

Example 5)

NG

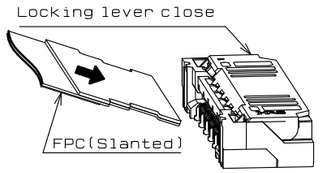

Example 6)

NG

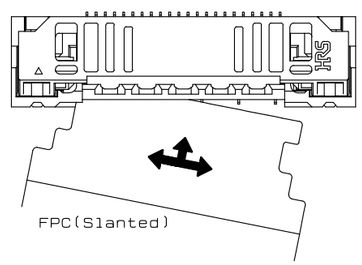

3. FPC insertion check
   Make sure that the FPC tabs are located in proper position
   after FPC insertion (Example 7) .
   (The FPC position is to be aligned by the protrusion of the locking lever.)

   [Caution]
   - Do not insert the FPC at an angle
     and/or stop it before insertion is completed (Example 8, 9).
   - As this product is designed for one action locking , the locking lever does not have to
     be operated after inserting FPC .

Example 7)

OK

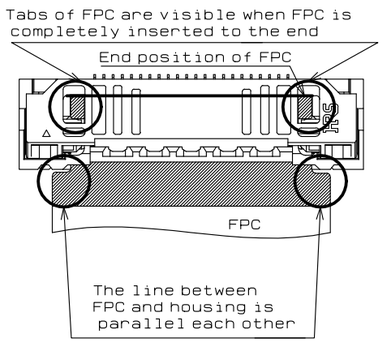

Section - locking area -

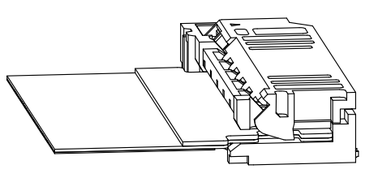

Example 8)

NG

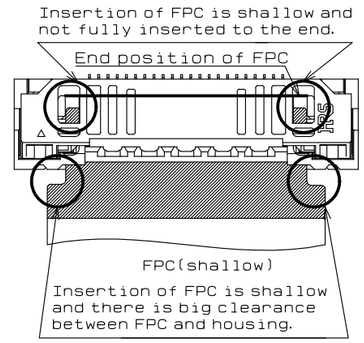

Section - locking area -

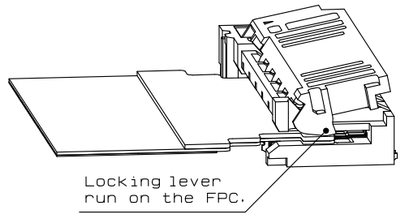

Example 9)

NG

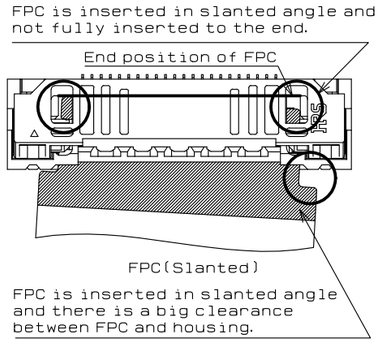

Section - locking area -

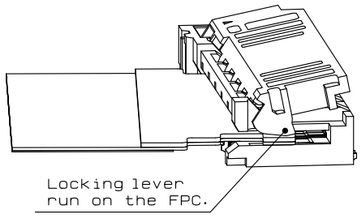

HRS DRAWING FOR REFERENCE

‹Instruction manual(1)›

HRS	DRAWING NO.	EDC-388109-01-00
	PART NO.	FH63S-**S-0.5SH(01)
	CODE NO.	CL0580

4 5/8

Jun.1.2025 Copyright 2025 HIROSE ELECTRIC CO., LTD. All Rights Reserved.
In case of consideration for using Automotive equipment / device which demand high reliability, kindly contact our sales window correspondents.

4. How to release the lock
Slowly flip up the locking lever to release the lock (Example 10).

[Caution]
- To open the locking lever, operate at the center of the locking lever (Example 11).
- To open the locking lever, do not operate the locking lever at one end only (Example 12).
- The locking lever is opened up to the movable limit, 45 degree. Do not open the locking lever beyond the specified degree or apply excess force to the locking lever(Example 13).
- Do not pick the locking lever to lift and pull it (Example 14).
- Operate the locking lever by hand without using sharp tool such as Tweezers. (Example 15).
- Do not apply excess force to the housing during the operation (Example 16).
- Do not try to open the lock lever from the FPC insertion side, as the locking lever is designed with the opposite direction from the FPC insertion direction (Example 17).

Example 10)

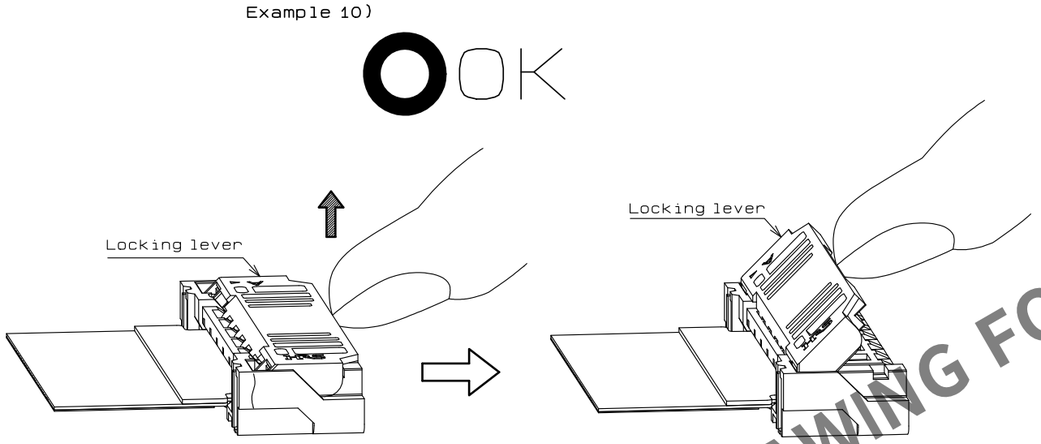

Example 11)

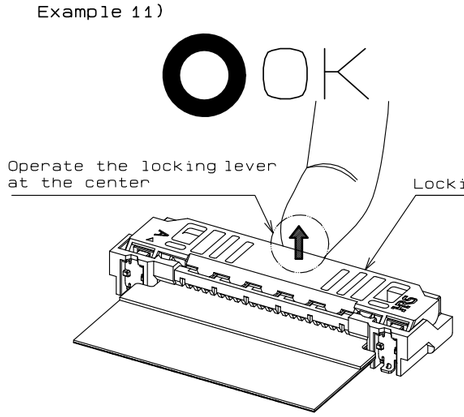

Example 12)

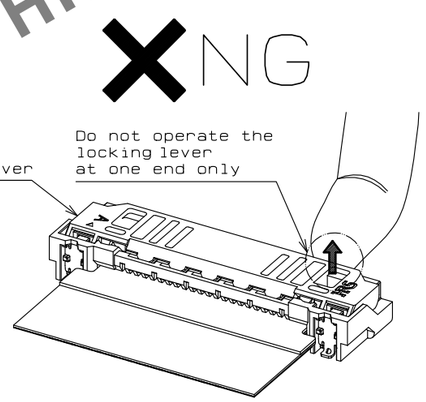

Example 13)

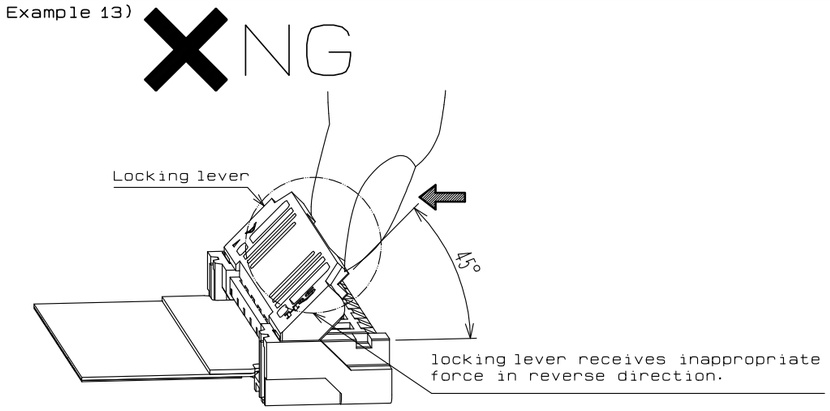

Example 14)

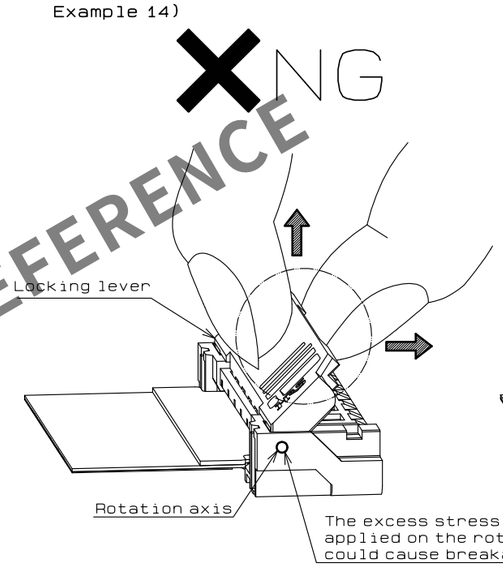

Example 15)

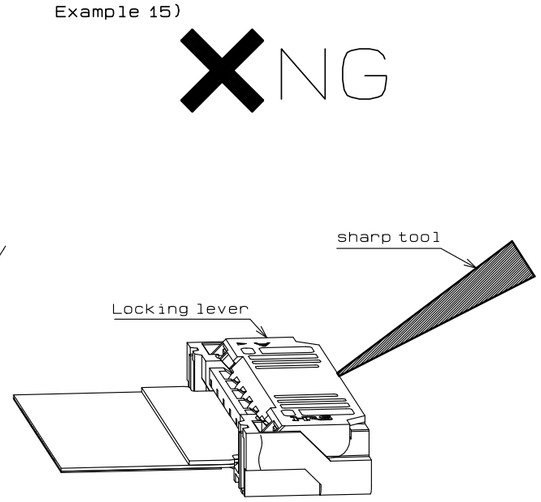

Example 16)

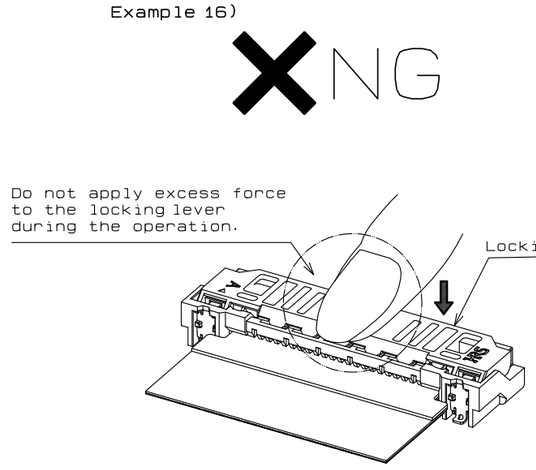

Example 17)

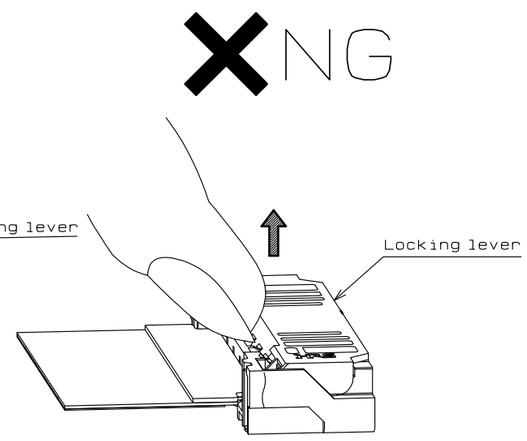

HRS DRAWING FOR REFERENCE

<Instruction manual(2)>

HRS	DRAWING NO.	EDC-388109-01-00
	PART NO.	FH63S-**S-0.5SH(01)
	CODE NO.	CL0580

4 6/8

Jun.1.2025 Copyright 2025 HIROSE ELECTRIC CO., LTD. All Rights Reserved.
In case of consideration for using Automotive equipment / device which demand high reliability, kindly contact our sales window correspondents.

5. How to remove FPC

After flip up the locking lever to the fully opened position carefully withdraw the FPC and close the lock lever(Example 18).
Do not withdraw the FPC on the condition that the locking lever is held by a finger(Example 19).
The lock lever close automatically when the FPC is removed, but this is not a defect of the product.(Example 20).

[Caution]
- Do not attempt to pull the FPC without unlocking the locking lever(Example 21).
- This connector has a temporary FPC holding structure with the locking lever. For FPC removal, do not pull out the FPC upward or angled direction(Example 22).

Example 18)

- Removal FPC -

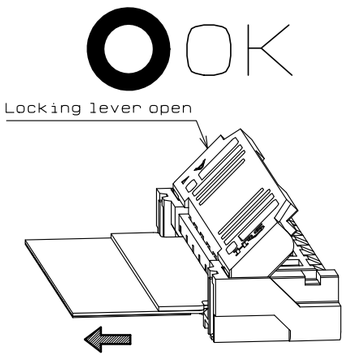

- Removal FPC -

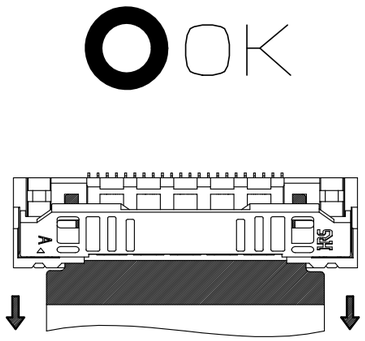

- Close the lock lever -

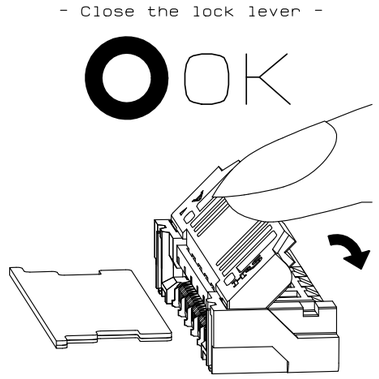

Example 19)

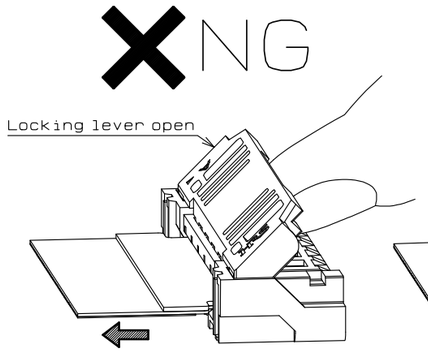

Example 20)

- After removing FPC -

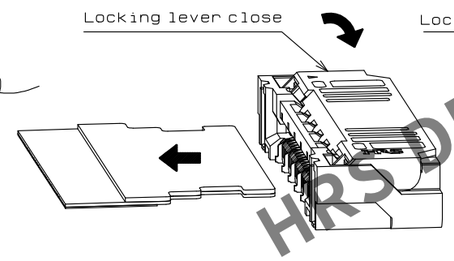

Example 21)

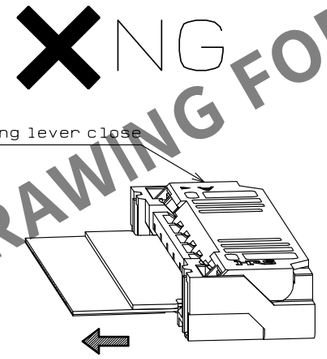

Example 22)

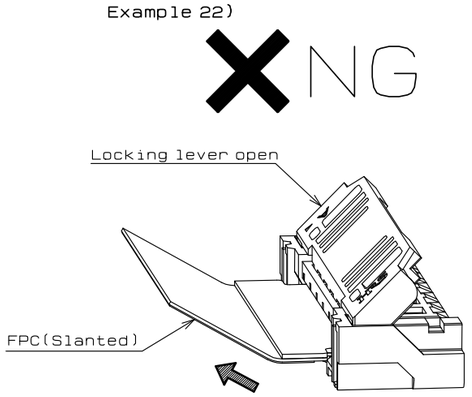

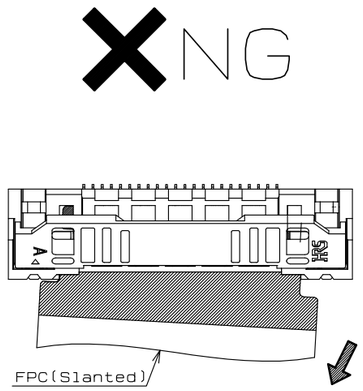

[Precautions for component layout]

Depending on a FPC rounding, a load is applied to the connector, and a contact failure may occur.
To prevent a failure, take the following notes into a consideration during mechanism design.

[Caution]
- When fixing FPC after FPC cabling, avoid pulling FPC, and route the wire FPC with slack. In this regard, the stiffener is parallel to the PCB (Example23).
- Avoid applying forces to FPC in vertical or horizontal directions. Do not bend the FPC excessively near the connector during use, or it may cause contact failure or FPC breakage. Stabilizing the FPC is recommended (Example 24, 25).
- Do not mount other components touching to the FPC underneath the FPC stiffener (Example26).
- Make adjustments with the FPC manufacturer for FPC bending performance and wire breakage.
- Keep a sufficient FPC insertion space in the stage of the layout in order to avoid incorrect FPC insertion. Appropriate FPC length and component layout are recommended for assembly ease. Too short FPC length makes assembly difficult.
- Keep spaces for the locking lever movement and its operation for PCB design and component layout.
- Please consult with our sales representative if you are using FPC with different configuration from our recommendation.

Example 23)

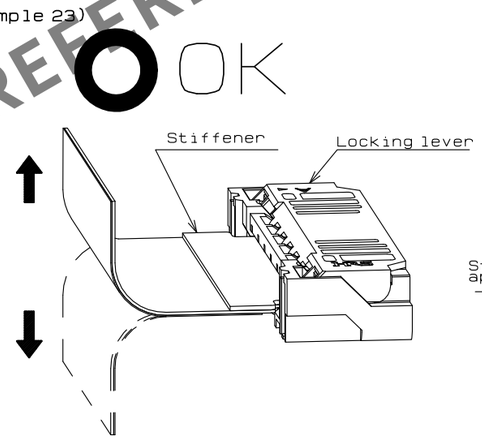

Example 24)

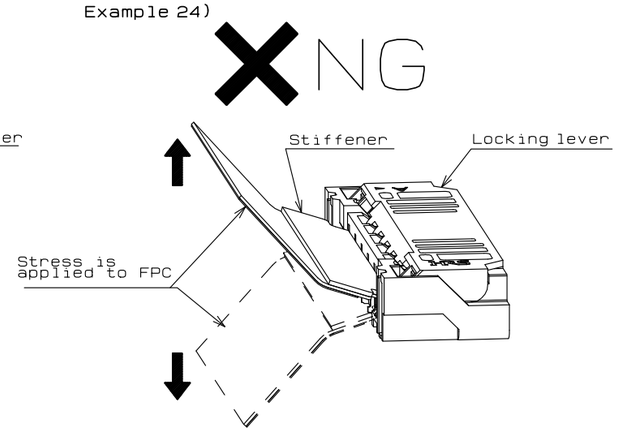

Example 25)

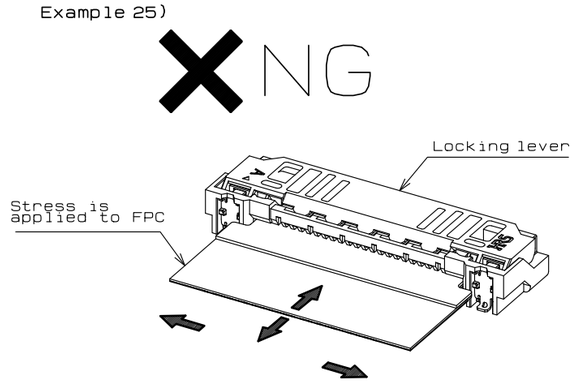

Example 26)

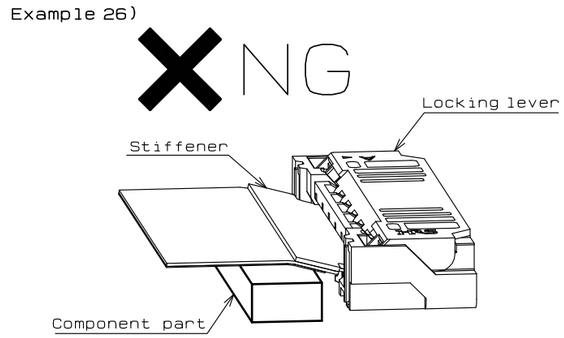

HRS DRAWING FOR REFERENCE

<Instruction manual(3)>

HRS	DRAWING NO.	EDC-388109-01-00
	PART NO.	FH63S-**S-0.5SH(01)
	CODE NO.	CL0580

Jun.1.2025 Copyright 2025 HIROSE ELECTRIC CO., LTD. All Rights Reserved.
In case of consideration for using Automotive equipment / device which demand high reliability, kindly contact our sales window correspondents.

[Instructions for mounting on the PCB]

Follow the instructions shown below when mounting on the PCB.

[Caution]
- Refer to recommended layouts on the page 1 for PCB and stencil pattern.
- Shorter pattern width than the recommended PCB dimension, could cause solder wicking and/or flux penetration.
- Larger pattern than the recommended stencil dimension, could cause solder wicking and/or flux penetration.
- Clearance underneath the contact lead and the housing is very small. In case solder resist and/or silk screening are applied on PCB underneath the connector, verify the thickness, or it could push up the connector bottom and may cause soldering defect and/or insufficient fillet formation.
- Apply reflow temperature profile within the specified conditions. In individual applications, the actual temperature may vary, depending on solder paste type, volume/thickness and PCB size/thickness. Consult your solder paste and equipment manufacturer for specific recommendations.
- Prevent warpage of PCB, where possible, since it can cause soldering failure :even with 0.1 mm max coplanarity.
- When mounting on the flexible board, please make sure to put a stiffener on the backside of the flexible board. We recommend a glass epoxy material with the thickness of 0.3 mm min.
- Do not add 1.0 N or greater external force when unreel or pick and place the connector etc, or it may get broken.

[Instructions for PCB handling after mounting the connector]

Follow the instructions shown below when mounting on the PCB.

[Caution]
- ·Splitting a large PCB into several pieces
  ·Screwing the PCB
  During the handling described above, do not exert an excessive force on the PCB. Otherwise, the connector may become defective.
- The warp of a 100 mm wide PCB should be 1.0 mm or less. The warp of PCB suffers stress on connector and the connector may become defective (Example 27).

Example 27)

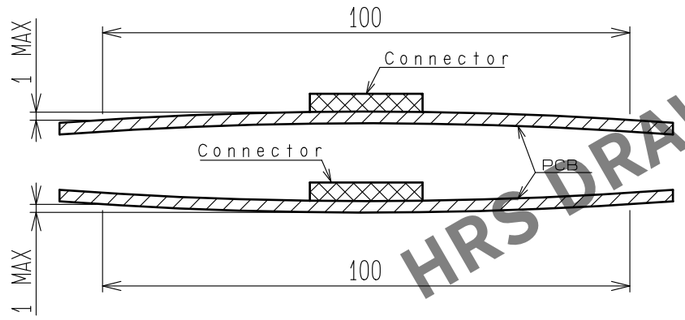

[Instructions on manual soldering]

Follow the instructions shown below when soldering the connector manually during repair work, etc.

[Caution]
- Do not perform manual soldering with the FPC inserted into the connector.
- Do not heat the connector excessively. Be very careful not to let the soldering iron contact any parts other than connector leads. Otherwise, the connector may be deformed or melt.
- Do not supply excessive solder (or flux). If excessive solder (or flux) is supplied on the terminals, solder or flux may adhere to the contacts, resulting in poor contact . Supplying excessive solder to the metal fittings may hinder locking lever rotation, resulting in breakage of the connector.

[Temperature profile of lead-free cream solder(recommended)]

The temperature represents the board surface temperature in the vicinity of the connector leads.
The temperature profile may vary depending on the type of cream solder, the manufacturer, the board size and other conditions such as mounting materials.
Please check the mounting status before use.

- Reflow method:IR reflow
- Number of reflow cycles:2 cycles MAX.

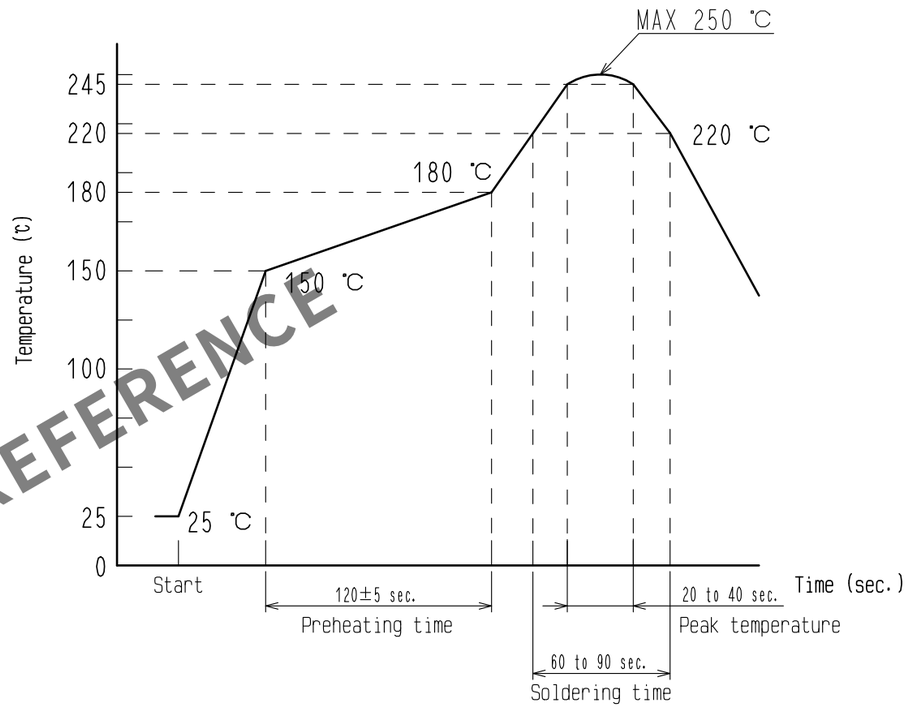

HRS DRAWING FOR REFERENCE

<Instruction manual(4)>

HRS	DRAWING NO.	EDC-388109-01-00
	PART NO.	FH63S-**S-0.5SH(01)
	CODE NO.	CL0580

4 8/8