Jun.1.2024 Copyright 2024 HIROSE ELECTRIC CO., LTD. All Rights Reserved.
In case of consideration for using Automotive equipment / device which demand high reliability, kindly contact our sales window correspondents.

Body

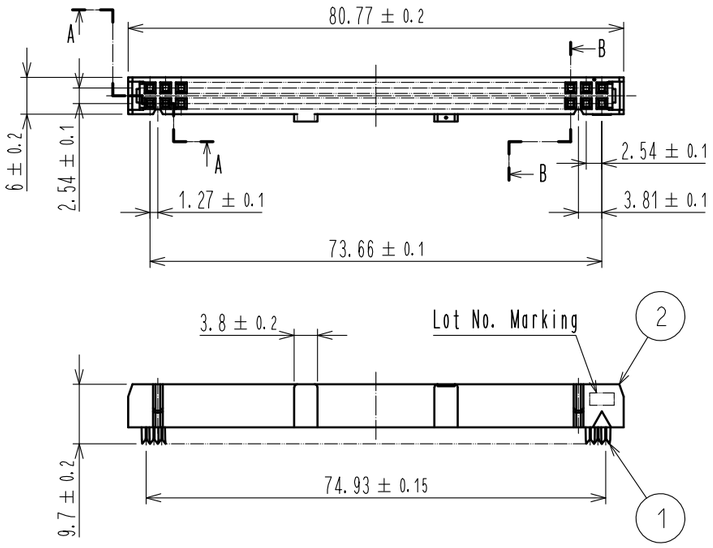

Protector

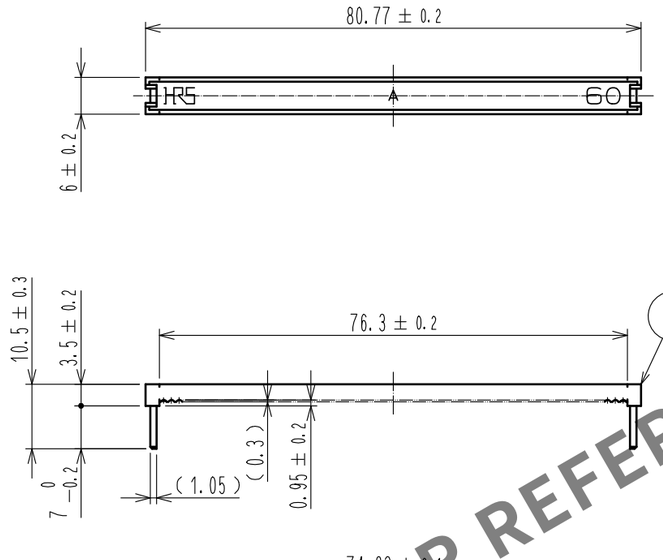

Clamp

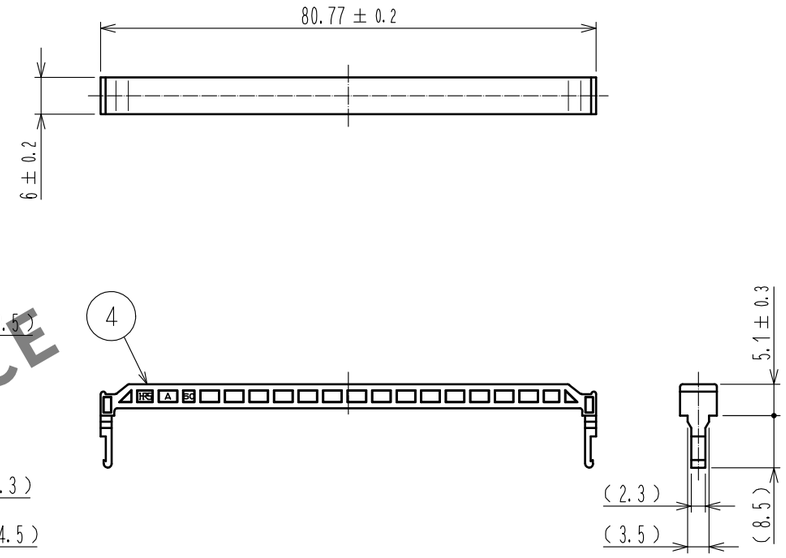

HRS DRAWING FOR REFERENCE

Notes 1 The dimensions in parentheses are for reference.

△1 2 Once a connector is harnessed,
the connector shall not be re-harnessed to a different cable.
Protectors and clamps shall also not be re-used once used in assembly.
When repair is needed, please replace the connector as well as all connector parts.
Re-using connector and connector parts may cause continuity failure due to
contact deformation / breakage, lock part destruction, etc.

△2 3 UL(File No.E52653)
C-UL(File No.E52653) authorization article.

A-A (5:1)

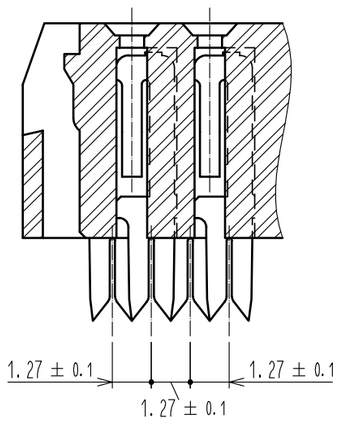

B-B (5:1)

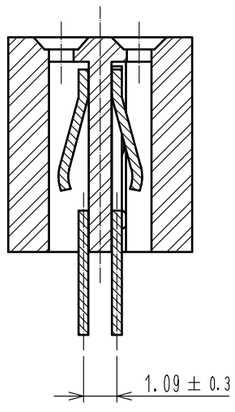

Assembly figure

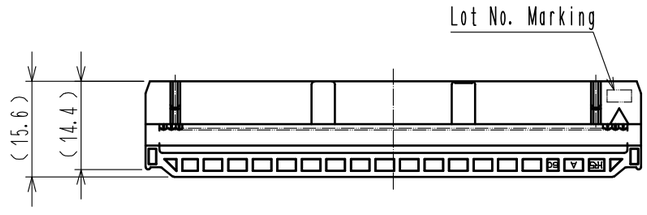

NO.	MATERIAL	FINISH , REMARKS	NO.	MATERIAL	FINISH , REMARKS
2	PBT	BLACK UL94V-0			
1	COPPER ALLOY	Contact area : Gold 0.15μm min. Under plating : Nickel 2.5μm min.	4	PBT	BLACK UL94V-0
			3	PBT	BLACK UL94V-0

UNITS	SCALE		COUNT	DESCRIPTION OF REVISIONS	DESIGNED	CHECKED	DATE
mm	1 : 1	△2	1	DIS-F-00005920	AK. IWAHORI	HT. YAMAGUCHI	20200306

HIROSE ELECTRIC CO., LTD.

APPROVED	: HT. YAMAGUCHI	20181211	DRAWING NO.	EDC-153323-63-00
CHECKED	: HT. YAMAGUCHI	20181211	PART NO.	HIF3MAW-60D-2.54R(63)
DESIGNED	: MT. ITANO	20181211	CODE NO.	CL610-2102-8-63 △2 1/1
DRAWN	: MK. OOKI	20181207		

FORM HC0011-5-7