May.1.2024 Copyright 2024 HIROSE ELECTRIC CO., LTD. All Rights Reserved.
In case of consideration for using Automotive equipment / device which demand high reliability, kindly contact our sales window correspondents.

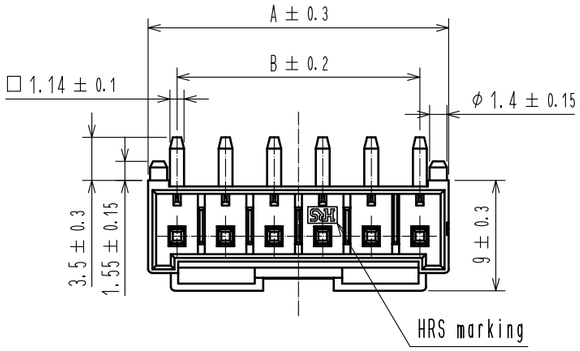

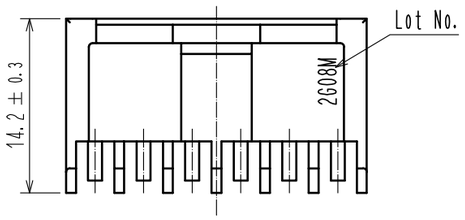

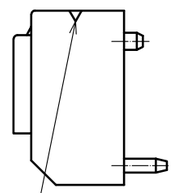

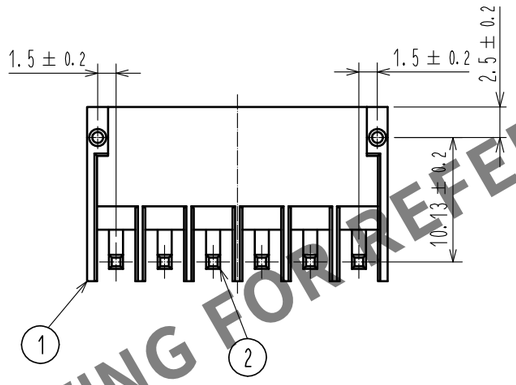

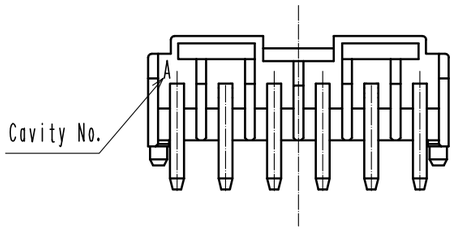

Mating figure

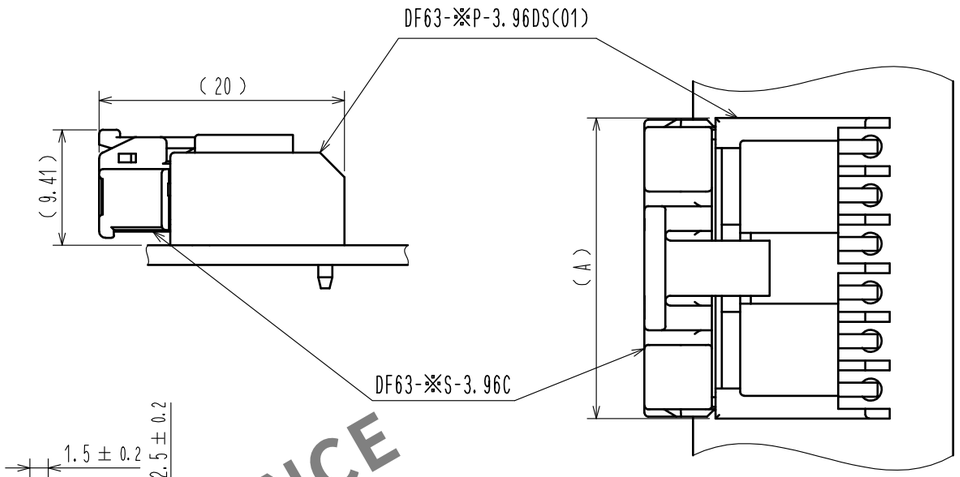

Recommended pattern(FREE)
(Recommended board thickness t=1.6mm)

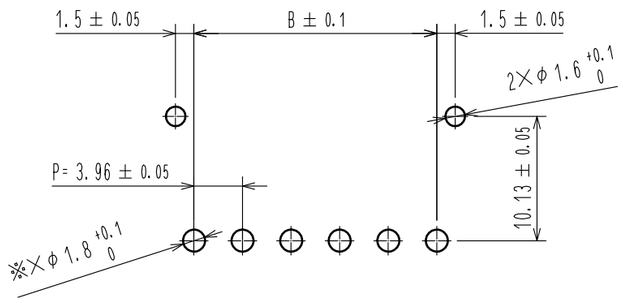

Part Number	HRS No.	Number of Contact(※)	A	B
DF63-4P-3.96DS(01)	680-0545-0-01	4	16.58	11.88
DF63-5P-3.96DS(01)	680-0546-0-01	5	20.54	15.84
DF63-6P-3.96DS(01)	680-0547-0-01	6	24.5	19.8

NOTE 1. Per pack : 100pieces
2. The dimension in parenthesis are for reference.
3. UL(FIle No.E52653)
C-UL(Fie No.E52653)
TUV(Certificate No.R50318850) authorization article.

NO.	MATERIAL	FINISH , REMARKS
1	PBT	UL94V-0(BLACK)
2	Brass	Gold plating 0.2 μm MIN Under area : Nickel plating 1μm MIN

UNITS	SCALE	COUNT	DESCRIPTION OF REVISIONS	DESIGNED	CHECKED	DATE
mm	2 : 1	1	DIS-H-00005337	TO.KUROMATSU	SZ.ONO	20191007

HIROSE ELECTRIC CO., LTD.

APPROVED	: TS.FUKUSHIMA	20161028	DRAWING NO.	EDC-359864-01-00
CHECKED	: TS.FUKUSHIMA	20161028	PART NO.	DF63-*P-3.96DS(01)
DESIGNED	: YK.YAMAGUCHI	20161028	CODE NO.	CL680-
DRAWN	: YK.YAMAGUCHI	20161028		1/1

HRS DRAWING FOR REFERENCE