Jan.1.2025 Copyright 2025 HIROSE ELECTRIC CO., LTD. All Rights Reserved.
In case of consideration for using Automotive equipment / device which demand high reliability, kindly contact our sales window correspondents.

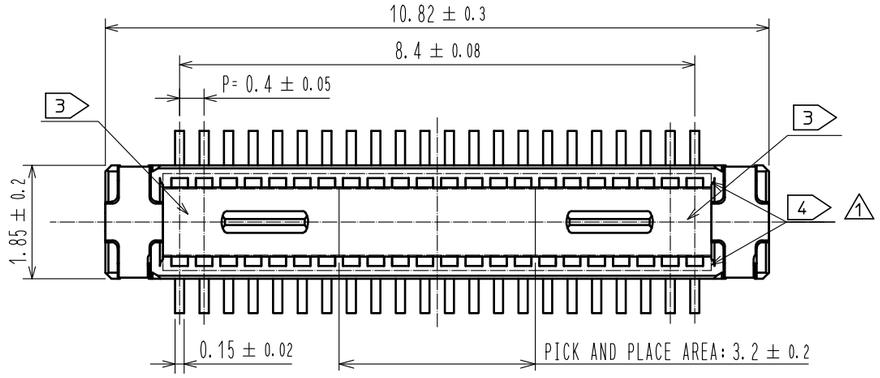

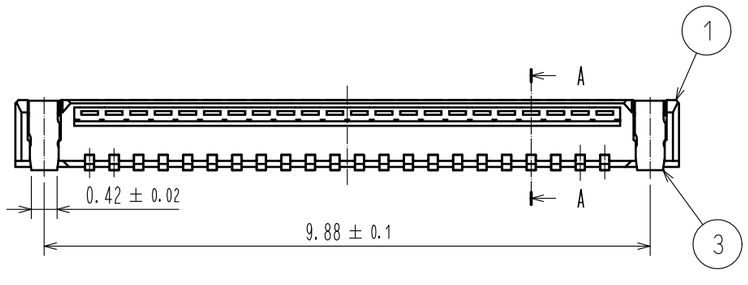

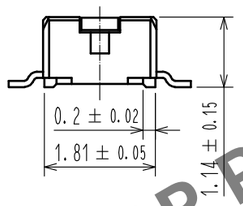

RECOMMENDED PATERN (5:1)

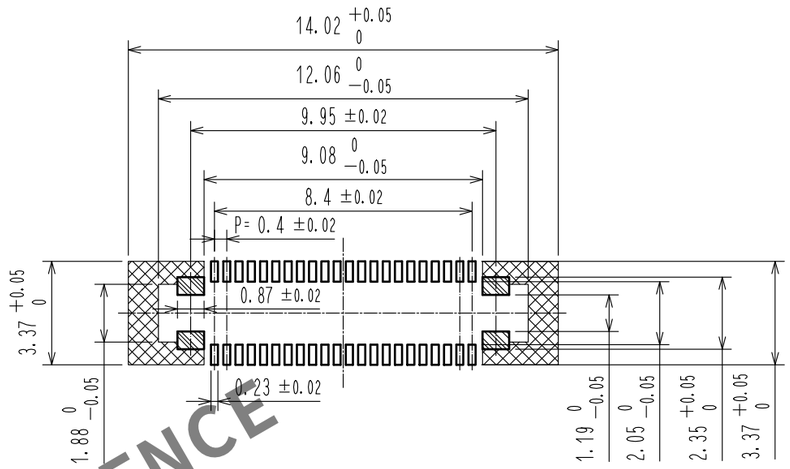

RECOMMENDED METAL MASK THICKNESS : 120μm
RECOMMENDED MASK OPENING RATIO : 80% FOR LEAD PAD

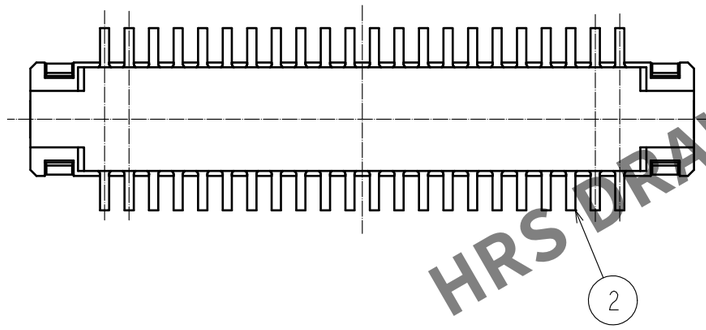

A-A
(20:1)

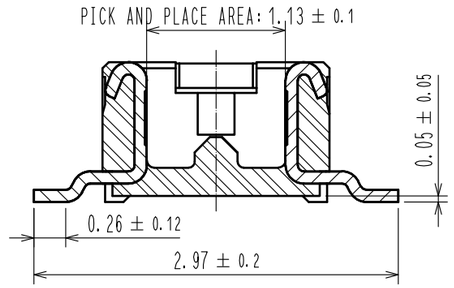

HRS DRAWING FOR REFERENCE

NOTES
1. ALL LEAD CO-PLANARITY SHALL BE 0.1mm MAX.
2. PLATING SPECIFICATIONS
   CONTACT AREA : GOLD 0.05μm MIN
   SMT LEAD : GOLD 0.05μm MIN
   UNDER PLATING : NICKEL 1μm MIN
   (SURFACE : SEALING)
3. HRS MARK AND CAV No. ARE INDICATED IN APPROX POSITION SHOWN.
1 4. THERE IS A POSSIBILITY THAT THE RESIN WILL BE EXPOSED AT THIS AREA, BUT THIS WILL NOT AFFECT THE CONTACT RELIABILITY.

NO.	MATERIAL	FINISH . REMARKS	NO.	MATERIAL	FINISH . REMARKS
3	STAINLESS STEEL	2	7	PS	CLEAR(REINFORCEMENT COLLAR)
2	PHOSPHOR BRONZE	2	6	PS	BLACK(PLASTIC REEL)
1	LCP	BLACK , UL94 V-0	5	POLYESTER	CLEAR(COVER TAPE)
			4	PS	CLEAR(EMBOSSED CARRIER TAPE)

UNITS	SCALE		COUNT	DESCRIPTION OF REVISIONS	DESIGNED	CHECKED	DATE
mm	10 : 1	1	2	DIS-H-00006346	PAN YIWEI	YK. SATAKE	20200928

HIROSE ELECTRIC CO., LTD.

APPROVED	MO. ISHIDA	20150206	DRAWING NO. EDC-355294-51-02
CHECKED	WR. FUKUCHI	20150206	PART NO. DF40GL-44DP-0.4V(51)
DESIGNED	SJ. WADA	20150206	CODE NO. CL684-4412-2-51
DRAWN	SJ. WADA	20150206	1/2

Jan.1.2025 Copyright 2025 HIROSE ELECTRIC CO., LTD. All Rights Reserved.
In case of consideration for using Automotive equipment / device which demand high reliability, kindly contact our sales window correspondents.

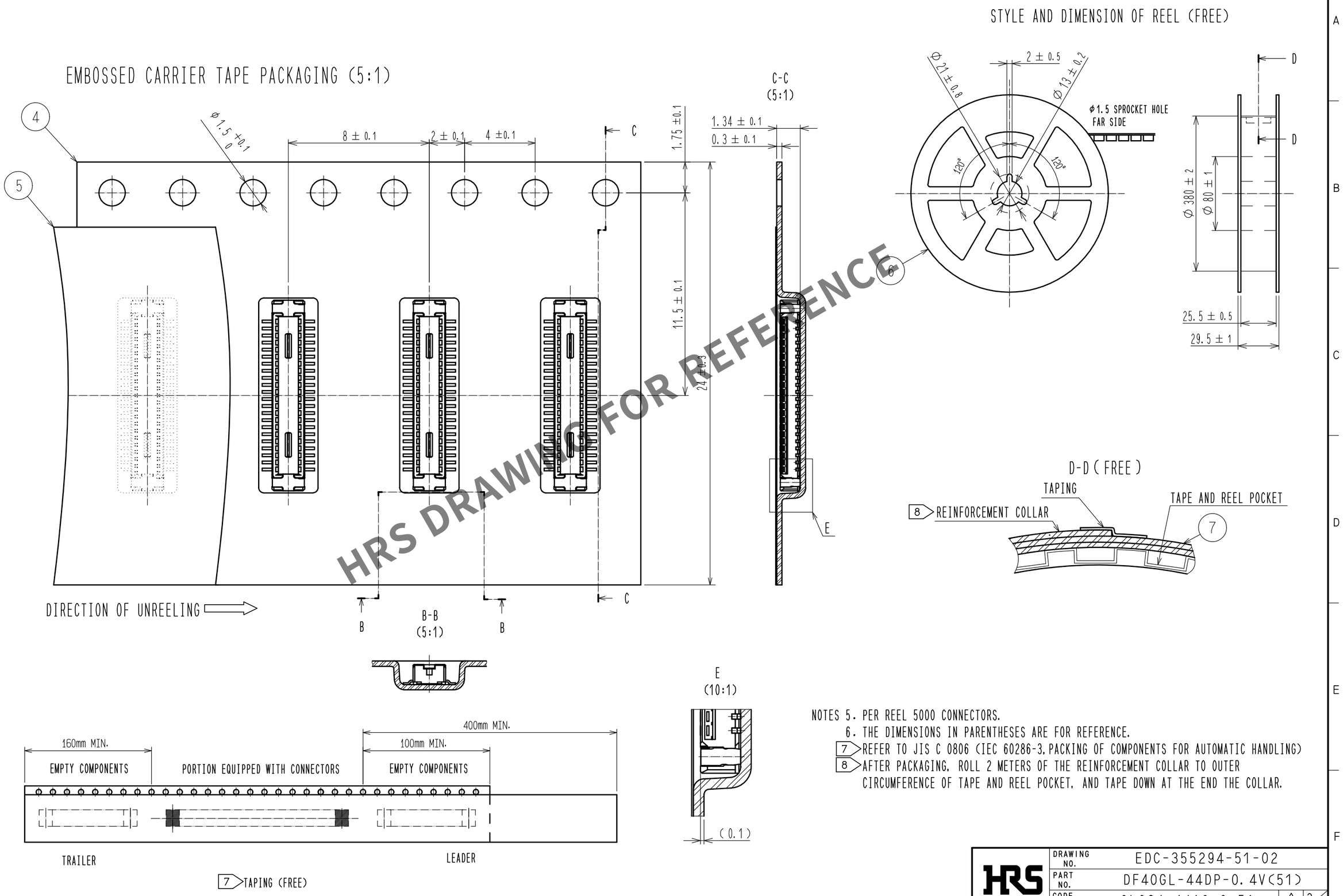

HRS DRAWING FOR REFERENCE

NOTES 5. PER REEL 5000 CONNECTORS.
6. THE DIMENSIONS IN PARENTHESES ARE FOR REFERENCE.
7 REFER TO JIS C 0806 (IEC 60286-3, PACKING OF COMPONENTS FOR AUTOMATIC HANDLING)
8 AFTER PACKAGING, ROLL 2 METERS OF THE REINFORCEMENT COLLAR TO OUTER CIRCUMFERENCE OF TAPE AND REEL POCKET, AND TAPE DOWN AT THE END THE COLLAR.

HRS	DRAWING NO.	EDC-355294-51-02
	PART NO.	DF40GL-44DP-0.4V(51)
	CODE NO.	CL684-4412-2-51

1 2/2

FORM HC0011-5-8