May.1.2024 Copyright 2024 HIROSE ELECTRIC CO., LTD. All Rights Reserved.
In case of consideration for using Automotive equipment / device which demand high reliability, kindly contact our sales window correspondents.

RoHS, ELV COMPLIANT

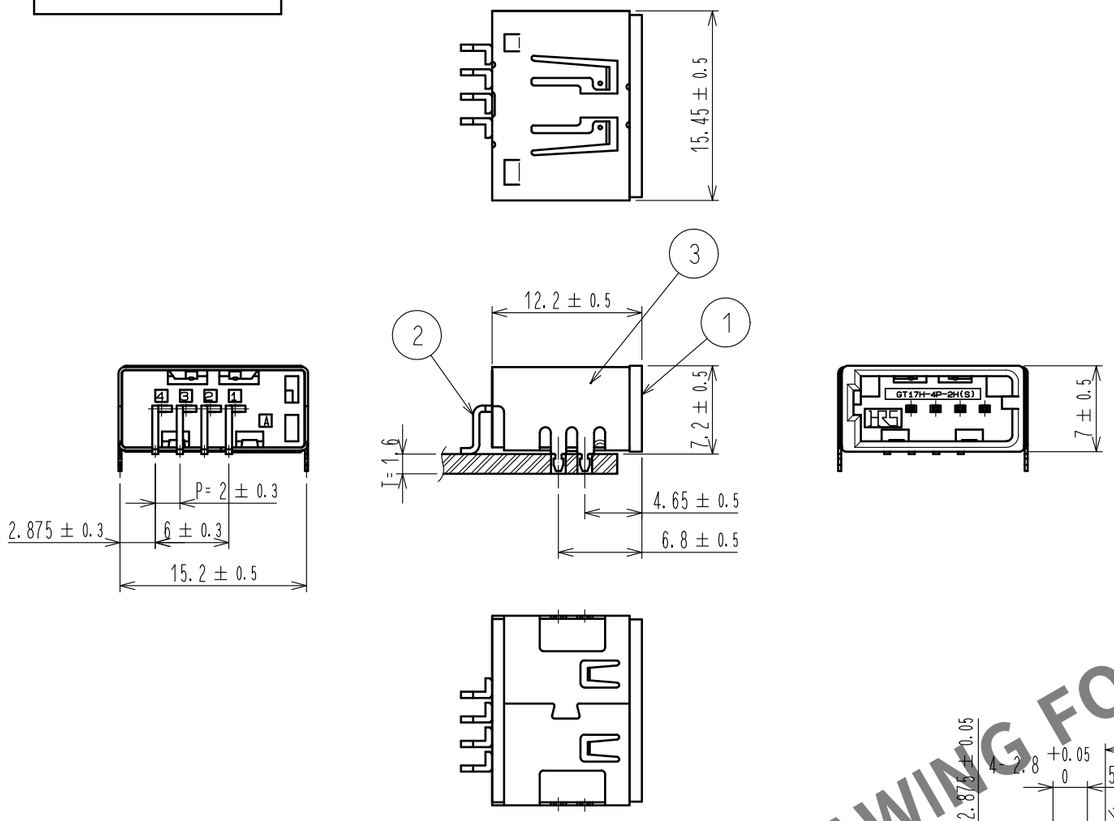


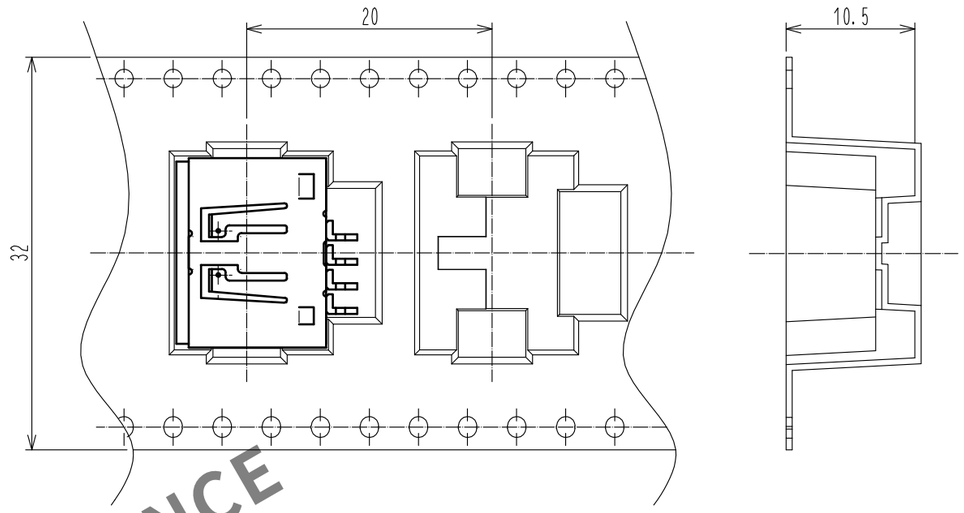


PACKAGEING STYLE

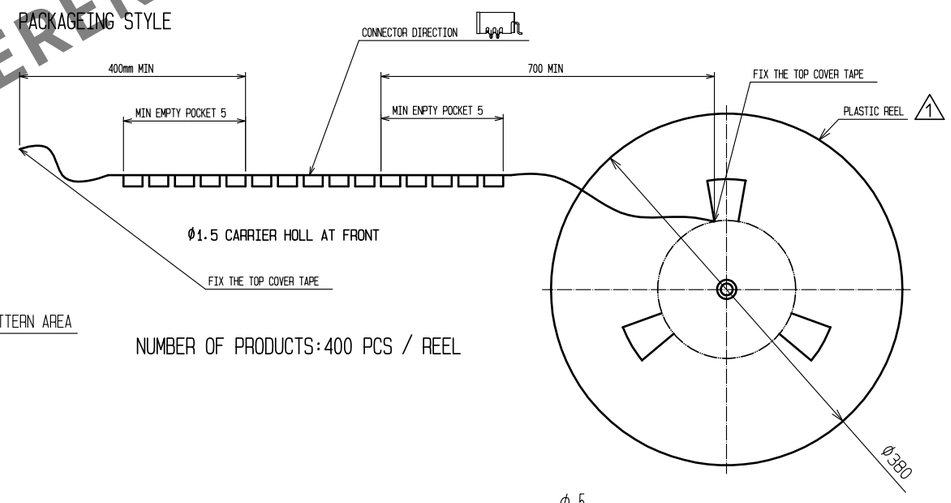


NUMBER OF PRODUCTS:400 PCS / REEL

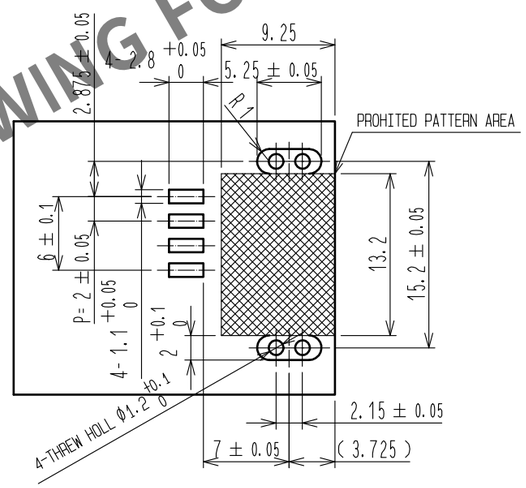


APPLICABLE PC BOARD LAYOUT

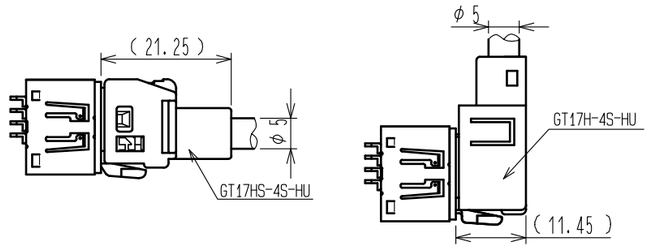


MATED CONNECTORS(1:1)

RECOMMENDED REFLOW PROFILE

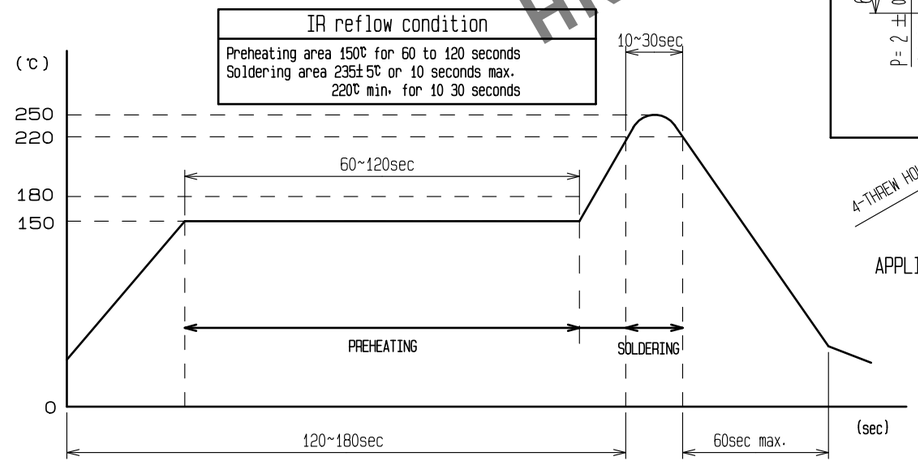


Note1. The soldering process is allowed up to twice under the same condition. However, the interval between the first and second process must be maintained at the room temperature.
Note2. The temparature indicates the board surface temperature on the connector lead area.

| NO. | MATERIAL | FINISH , REMARKS | NO. | MATERIAL | FINISH , REMARKS |
|---|---|---|---|---|---|
| 2 | BRASS | TIN PLATING | | | |
| 1 | PPS | LIGHT GRAY | 3 | COPPER ALLOY | TIN PLATING |

| UNITS | SCALE | COUNT | DESCRIPTION OF REVISIONS | DESIGNED | CHECKED | DATE |
|---|---|---|---|---|---|---|
| mm | 2 : 1 | 1 | DIS-T-00006678 | TS. KUBOTA | EJ. WAKATSUKI | 20200909 |

HIROSE ELECTRIC CO., LTD.

| | | | | |
|---|---|---|---|---|
| APPROVED | : KI. HIROKAWA | 20200331 | DRAWING NO. | EDC-166828-55-00 |
| CHECKED | : EJ. WAKATSUKI | 20200327 | PART NO. | GT17HR-4P-2H(55) |
| DESIGNED | : TS. KUBOTA | 20200325 | CODE NO. | CL767-0146-1-55 |
| DRAWN | : YK. MITSUISHI | 20200313 | | 1/1 |

HRS DRAWING FOR REFERENCE