Apr.1.2024 Copyright 2024 HIROSE ELECTRIC CO., LTD. All Rights Reserved.
In case of consideration for using Automotive equipment / device which demand high reliability, kindly contact our sales window correspondents.

RoHS, ELV COMPLIANT

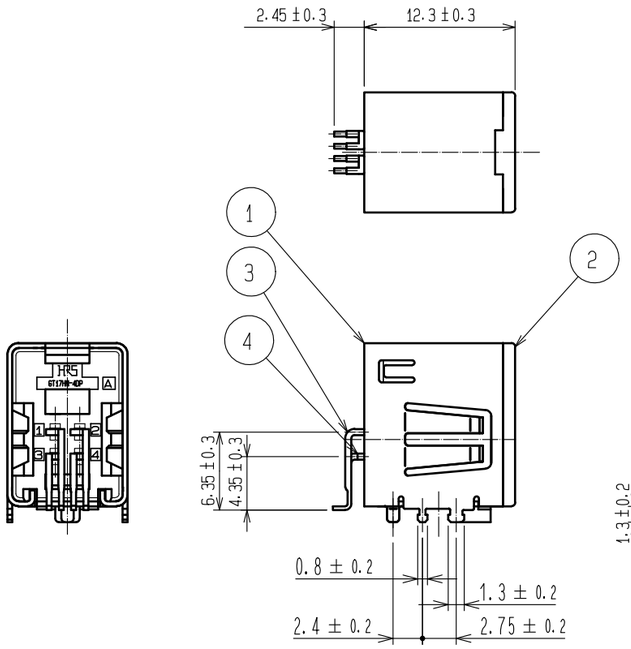

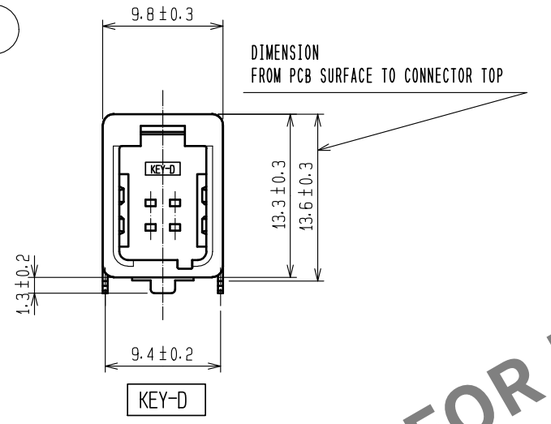

NOTES
1) RECOMMENDED THICKNESS OF SOLDERING PASTE: 0.15mm
2) RECOMMENDED REFLOW PROFILE (SEE RIGHT GRAPH)
   CYCLE TIME: UP TO 2 CYCLES OF REFLOW SOLDERING ARE POSSIBLE UNDER THE CONDITIONS, PROVIDED THAT THERE IS A RETURN TO NORMAL TEMPERATURE BETWEEN THE FIRST AND SECOND CYCLE.
   PEAK TEMPERATURE: 250℃
   230℃ MIN. FOR 20 TO 40 SECONDS.
   PREHEATING AREA 150-180℃ FOR 60 TO 120 SECONDS.
3) HAND SOLDERING: 280-300℃, 2S MAX.
4) CONTACT COPLANARITY: 0.1mm MAX.
5) RECOMMENDED THICKNESS OF PCB: 1.2-1.6mm
6) FOR THE PREVENTION EXCESSIVE STRESS FOR CONNECTOR AND PCB, WE RECOMMEND ADDITIONAL SUPPORT MECHANISM IF THE FLANGE WAS ELIMINATED.

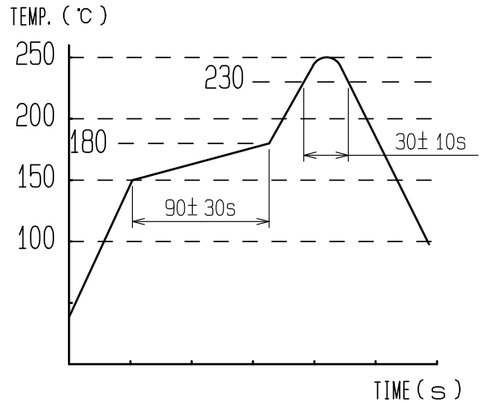

HRS DRAWING FOR REFERENCE

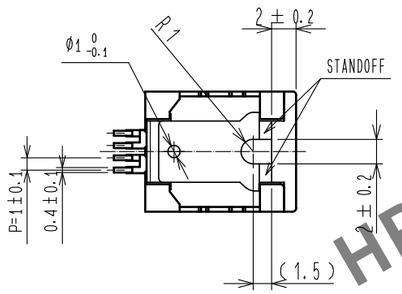

RECOMMENDED PCB LAYOUT

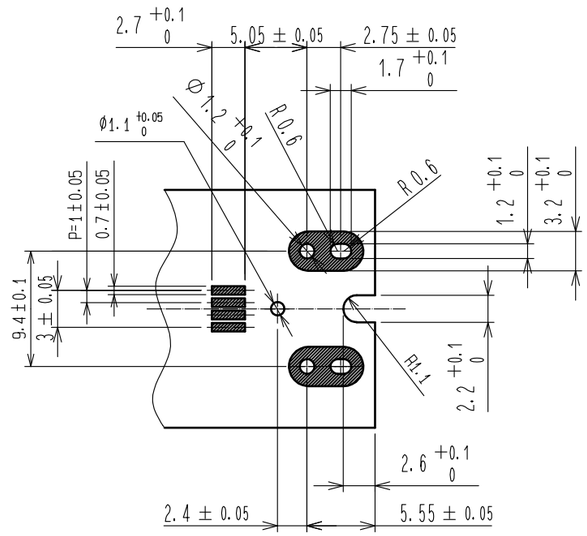

PANNEL LAYOUT

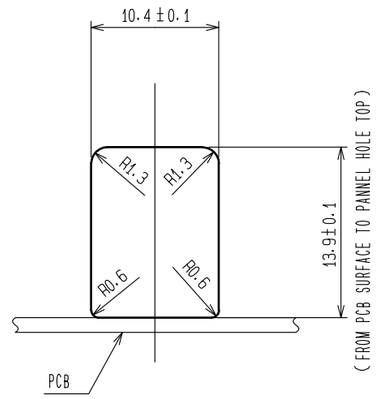

VIEW A (4:1)

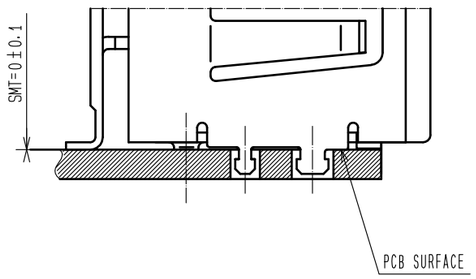

MATED CONNECTORS

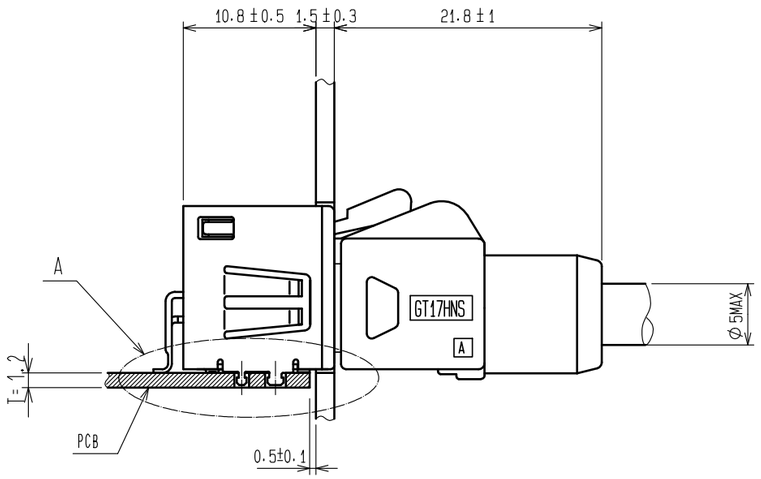

NO.	MATERIAL	FINISH , REMARKS	NO.	MATERIAL	FINISH , REMARKS
2	PPS	BLACK	4	BRASS	TIN PLATING
1	COPPER ALLOY	TIN PLATING	3	BRASS	TIN PLATING

UNITS	SCALE	COUNT	DESCRIPTION OF REVISIONS	DESIGNED	CHECKED	DATE
mm	2 : 1	0				

HIROSE ELECTRIC CO., LTD.

APPROVED	: KI. HIROKAWA	20200409	DRAWING NO.	EDC-168956-57-00
CHECKED	: EJ. WAKATSUKI	20200408	PART NO.	GT17HN-4DP-2H(D)(57)
DESIGNED	: TS. KUBOTA	20200325	CODE NO.	CL767-0276-7-57
DRAWN	: YK. MITSUISHI	20200319		0 1/2

FORM HC0011-5-7

Apr.1.2024 Copyright 2024 HIROSE ELECTRIC CO., LTD. All Rights Reserved.
In case of consideration for using Automotive equipment / device which demand high reliability, kindly contact our sales window correspondents.

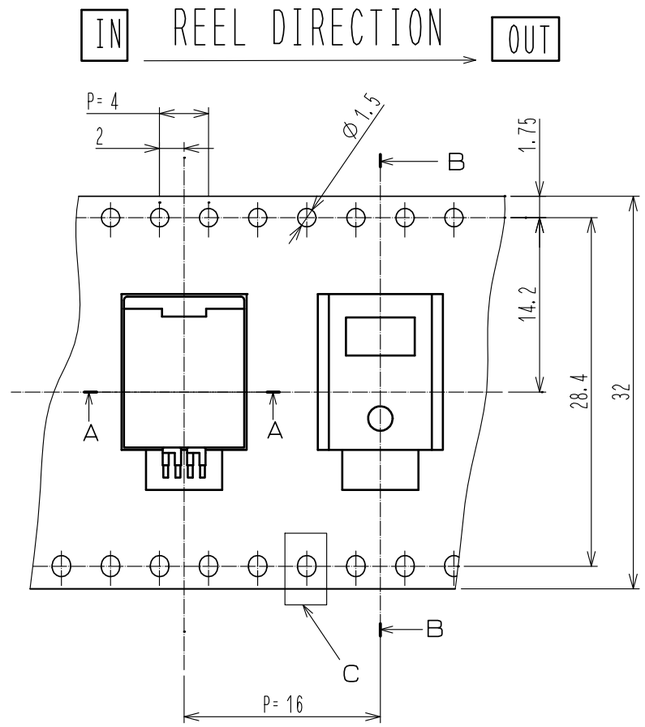

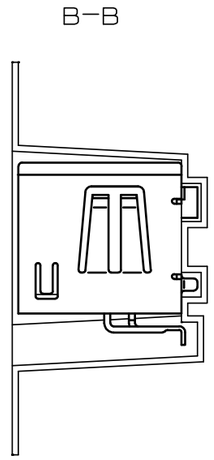

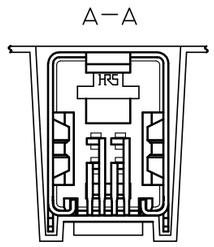

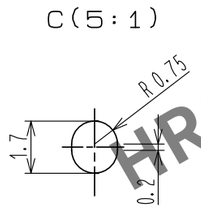

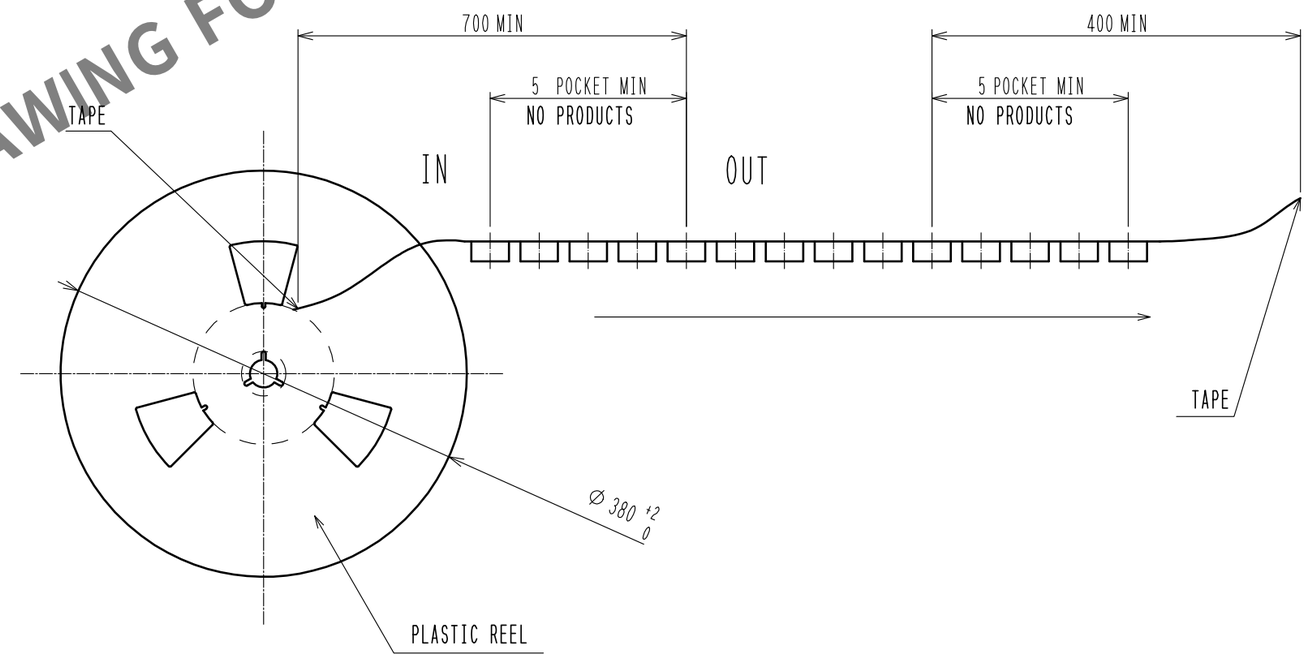

HRS DRAWING FOR REFERENCE

PACKAGE STYLE

NOTE 1. 300 PCS / REEL
NOTE 2. TOP COVER TAPE PEEL FORCE TO BE 0.1 TO 0.7 N AFTER SEALING.

HRS	DRAWING NO.	EDC-168956-57-00
	PART NO.	GT17HN-4DP-2H(D)(57)
	CODE NO.	CL767-0276-7-57 △0 2/2