Apr.1.2024 Copyright 2024 HIROSE ELECTRIC CO., LTD. All Rights Reserved.
In case of consideration for using Automotive equipment / device which demand high reliability, kindly contact our sales window correspondents.

	COUNT	DESCRIPTION OF REVISIONS	BY	CHKD	DATE		COUNT	DESCRIPTION OF REVISIONS	BY	CHKD	DATE
△					. .	△					. .
△					. .	△					. .
△					. .	△					. .

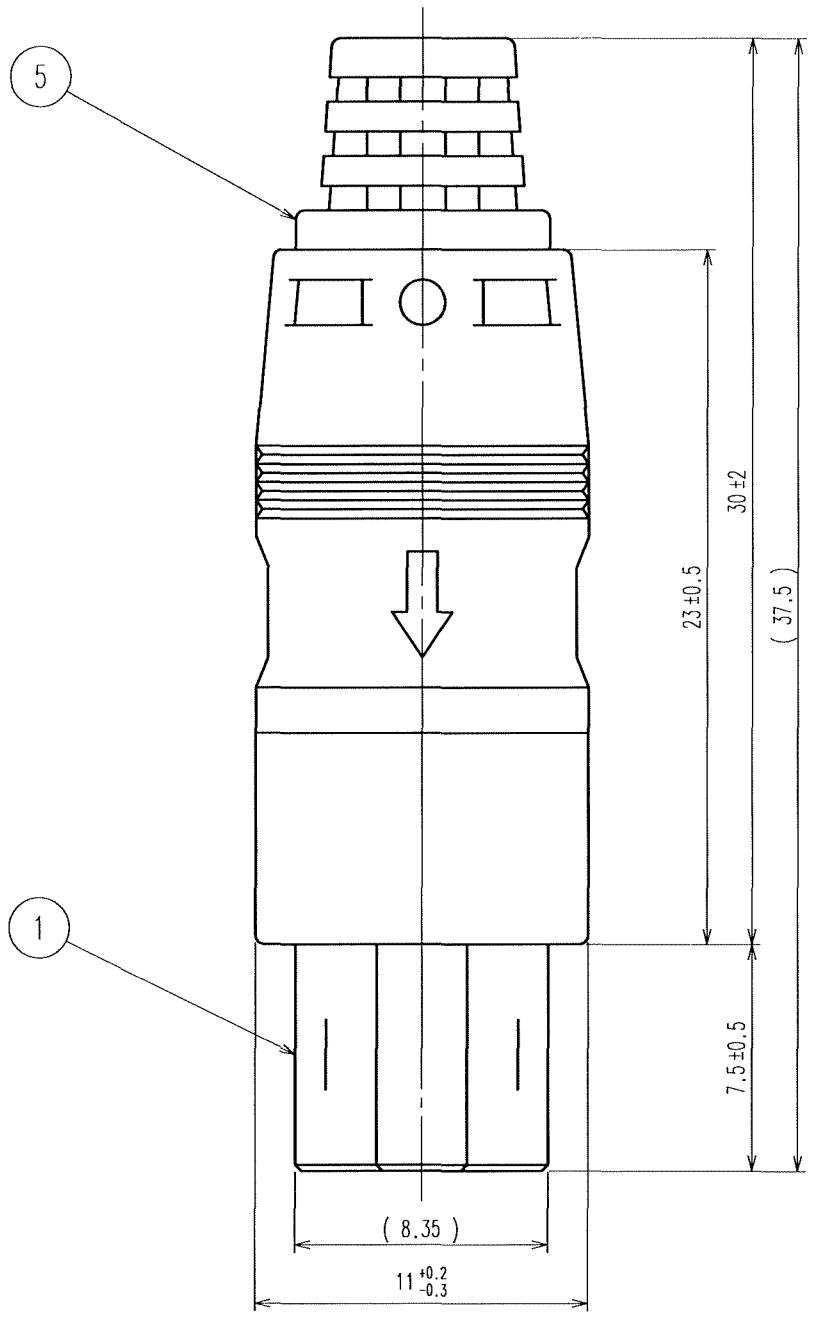

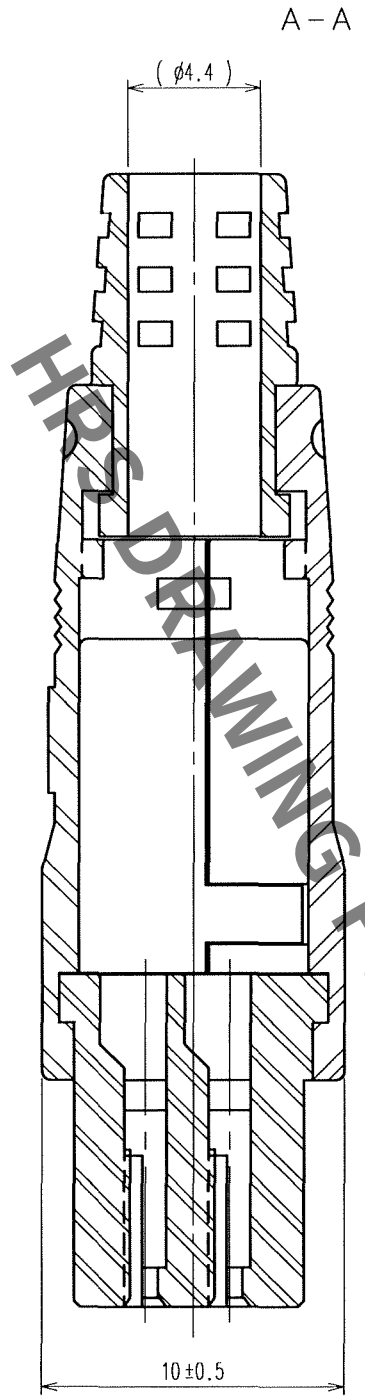

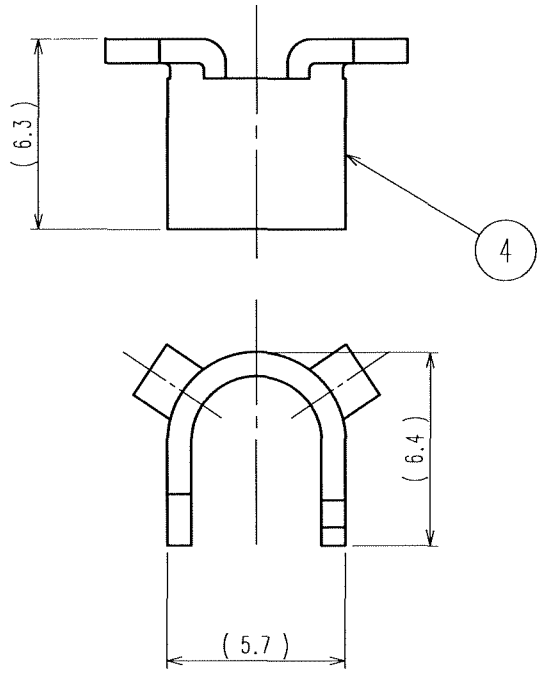

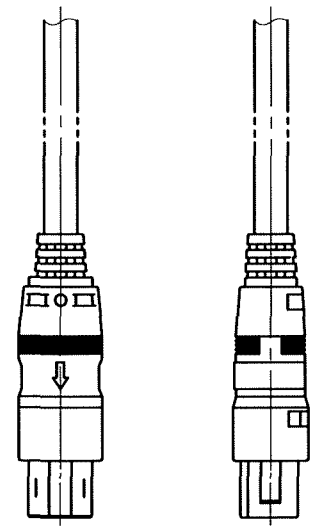

(1 : 1)

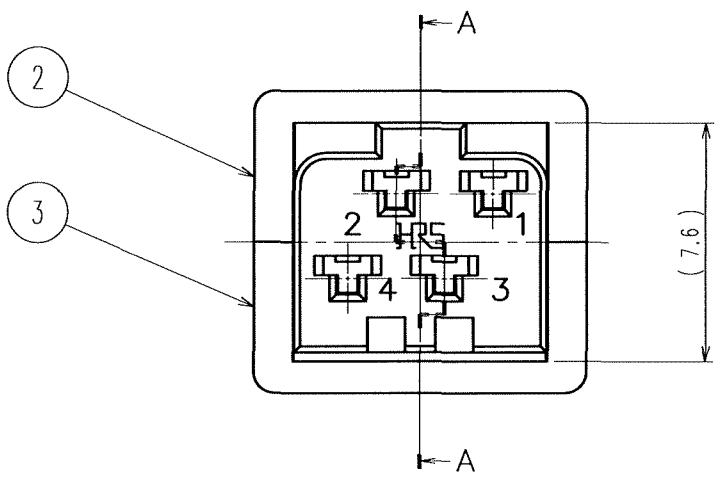

NOTE 1 APPLICABLE CLIMP COMTACT:RP34-SC-212 (CL113-5043-5)

2 APPLICABLE CLIMP COMTACT EXTRACTION TOOL:RP34-SC-TP (CL150-0072-6)

3 APPLICABLE CLIMPING JIG:RP34-TC-01 (CL150-0074-1)

4 THIS PRODUCT DISASSEMBLED WHEN DELIVERED

HRS DRAWING FOR REFERENCE

NO.	MATERIAL	FINISH, REMARKS	NO.	MATERIAL	FINISH, REMARKS
3	POLYCARBONATE	(BLACK) UL94V-0			
2	POLYCARBONATE	(BLACK) UL94V-0	5	VINYLE	(BLACK) UL94V-0
1	POLYCARBONATE	(BLACK) UL94V-0	4	BRASS	

CODE NO.(OLD)	DRAWN	DESIGNED	CHECKED	APPROVED	RELEASED
CL	Y. Hanatsu 05.12.19	D. Matsuno 05.12.19	E. Kunii 05.12.19	M. Sato 05.12.20	. .

SCALE 4 : 1	DRAWING NO. EDC3-110262-71	PART NO. RP34-8SP-4SC(71)
UNITS mm	HRS HIROSE ELECTRIC CO., LTD	CODE NO. CL113-5097-4-71 1/1

TO
R

FORM NO.229