Sep.1.2021 Copyright 2021 HIROSE ELECTRIC CO., LTD. All Rights Reserved.
In case of consideration for using Automotive equipment / device which demand high reliability, kindly contact our sales window correspondents.

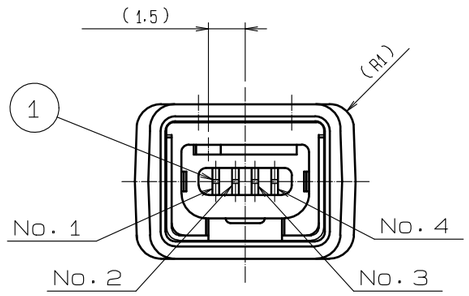

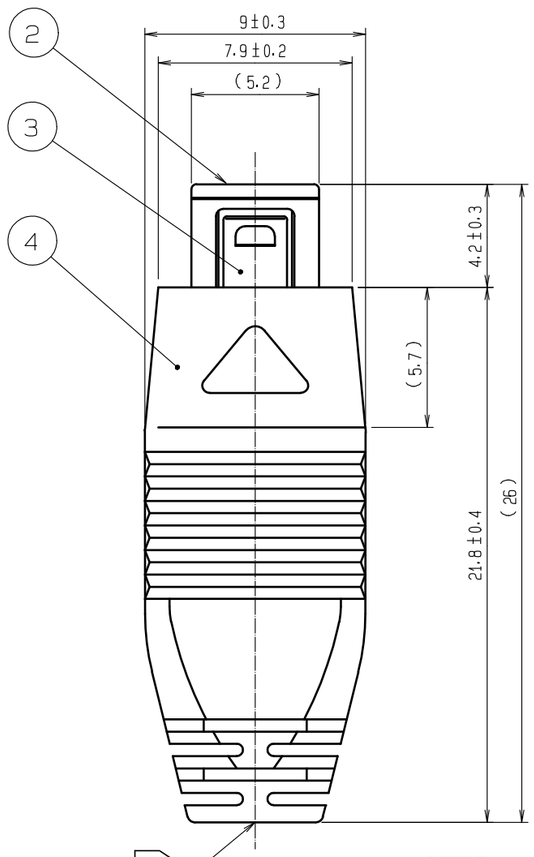

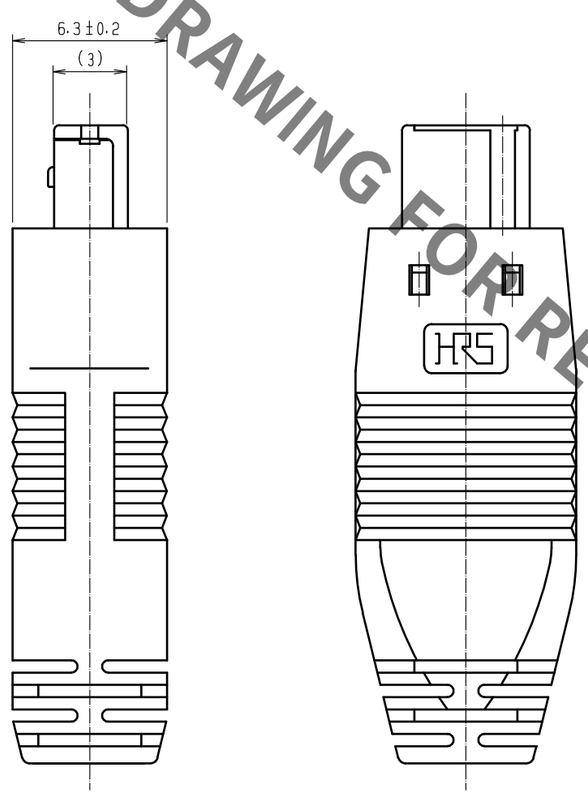

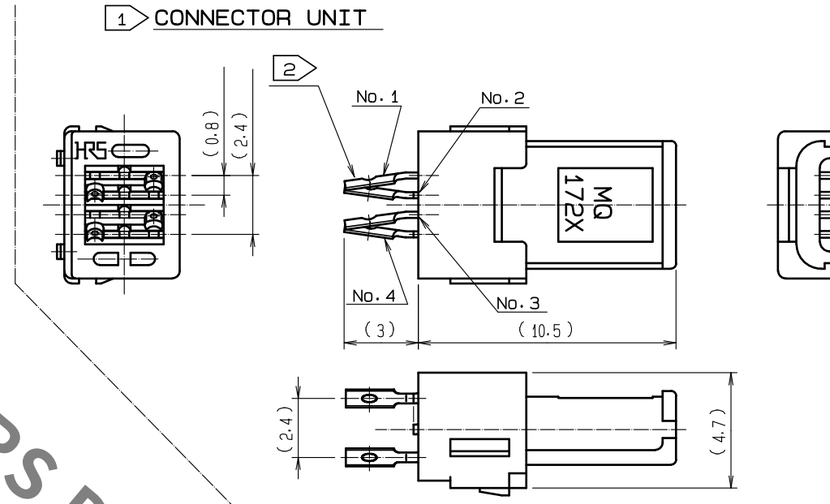

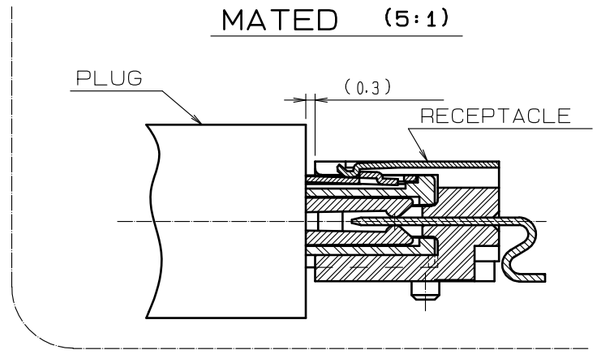

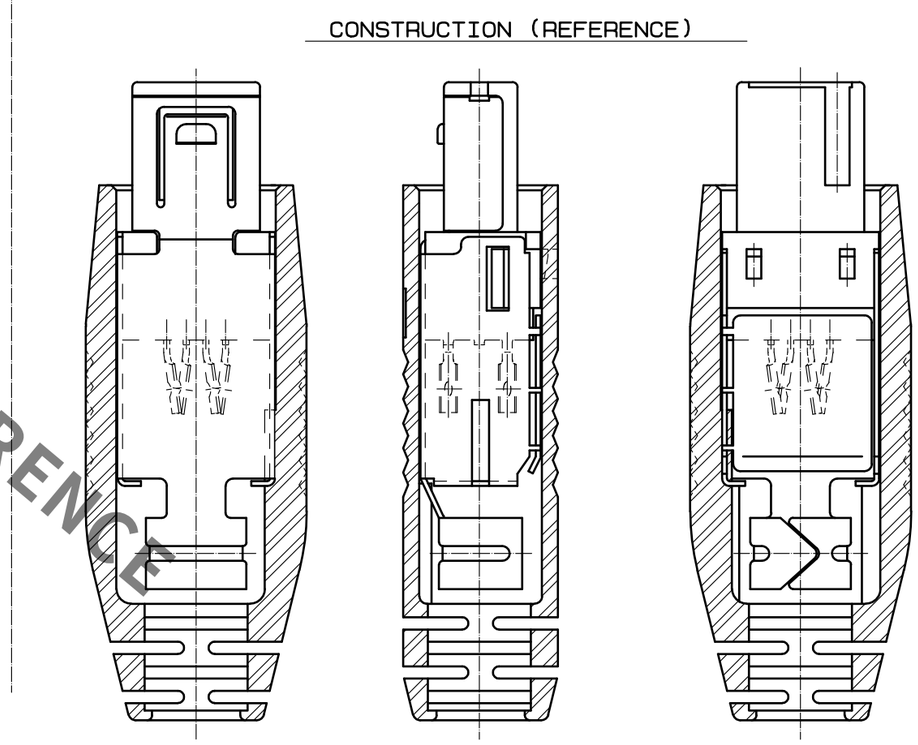

HRS DRAWING FOR REFERENCE

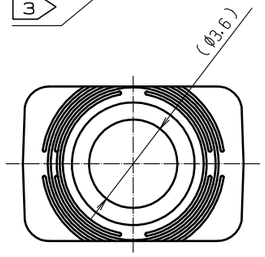

NOTES

1. COMPONENTS OF REF. NO. 3 AND NO. 4 ARE APPENDED PRODUCTS EXCEPT CONNECTOR UNIT (ASSEMBLED REF. NO1 AND NO. 2).
2. TERMINAL AREA SHALL BE COVERD WITH SHRINKAGE TUBE AFTER SOLDERING.
3. PROJECTION OF GATE IS 0.8 MAX.
4. DIRECTIONS FOR USE.
   ·PLEASE DO NOT USE FOR THE PURPOSE OF INTERRUPTING THE CURRENT.

NO.	MATERIAL	FINISH , REMARKS	NO.	MATERIAL	FINISH , REMARKS
2	POLYAMIDE	BLACK UL94V-0	4	POLYAMIDE	BLACK UL94V-0
1	COPPER ALLOY	SELECTIVE GOLD PLATED +SELECTIVE TIN-LEAD PLATED	3	STAINLESS STEEL	

UNITS	SCALE	COUNT	DESCRIPTION OF REVISIONS	DESIGNED	CHECKED	DATE
mm	4 : 1	0				

HRS HIROSE ELECTRIC CO., LTD.

APPROVED	: NM. NISHIMATSU	15. 10. 27	DRAWING NO.	EDC-120843-30-00
CHECKED	: KN. ICHIKAWA	15. 10. 27	PART NO.	MQ172X-4SA-CV(30)
DESIGNED	: TS. ITO	15. 10. 27	CODE NO.	CL206-2001-9-30
DRAWN	: AK. AKIYAMA	15. 10. 27		0 1/1

FORM HC0011-5-7