Apr.1.2024 Copyright 2024 HIROSE ELECTRIC CO., LTD. All Rights Reserved.
In case of consideration for using Automotive equipment / device which demand high reliability, kindly contact our sales window correspondents.

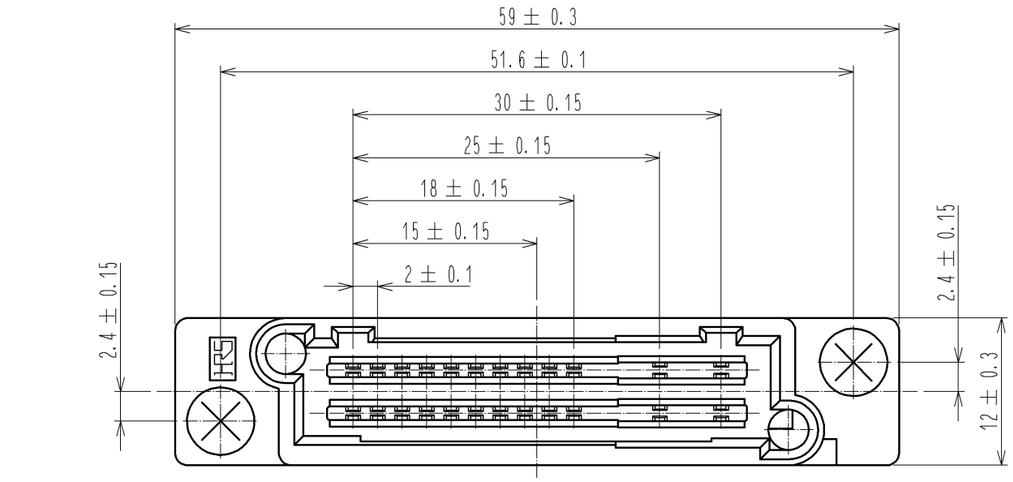

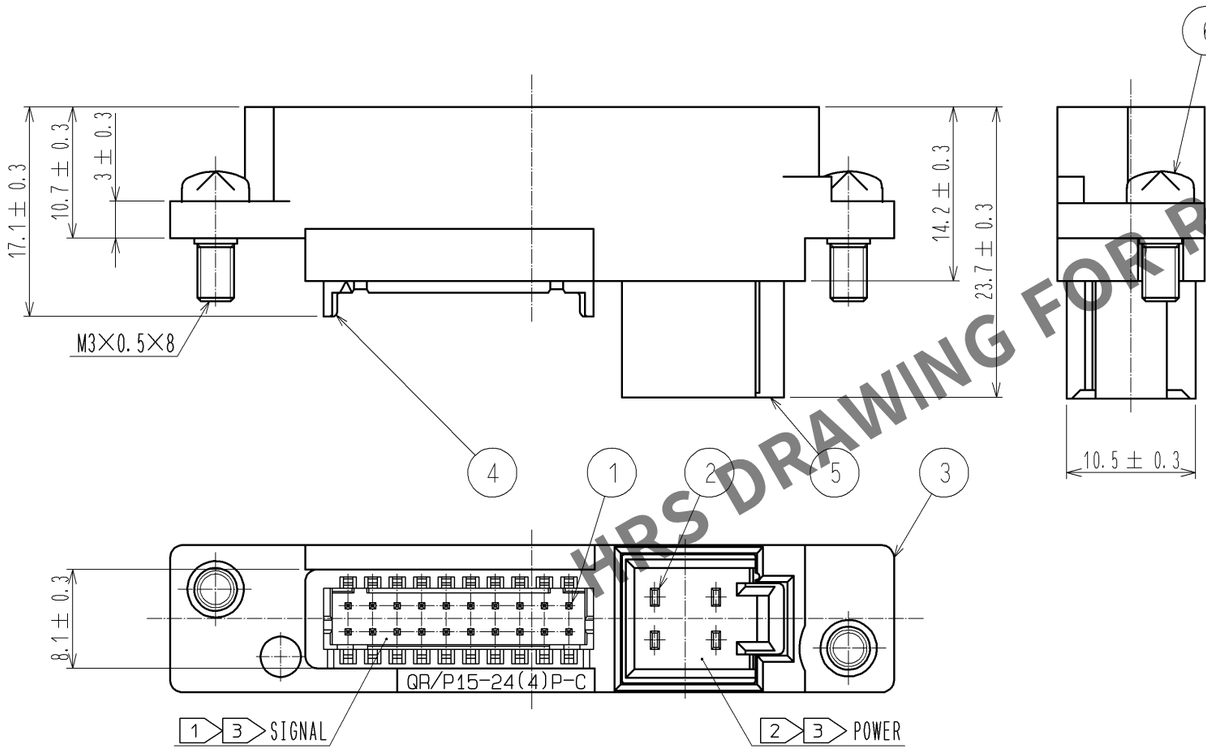

PANEL CUTOUT, REAR MOUNTED SIDE (FREE)

(APPLICABLE PANEL THICKNESS t 3 MAX)

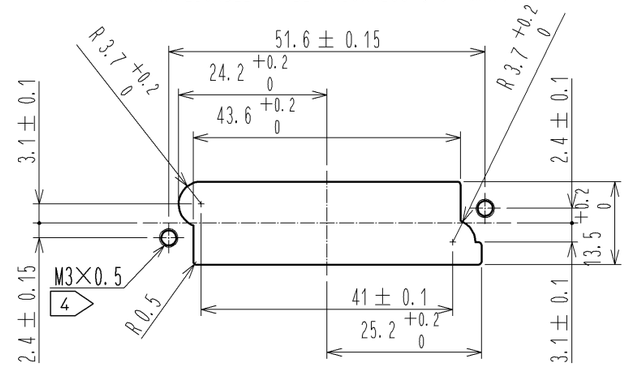

PANEL CUTOUT, MOUNTED SIDE (FREE)

(APPLICABLE PANEL THICKNESS t 3 MAX)

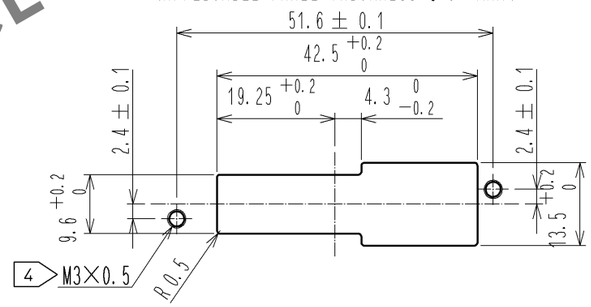

MATED DRAWING

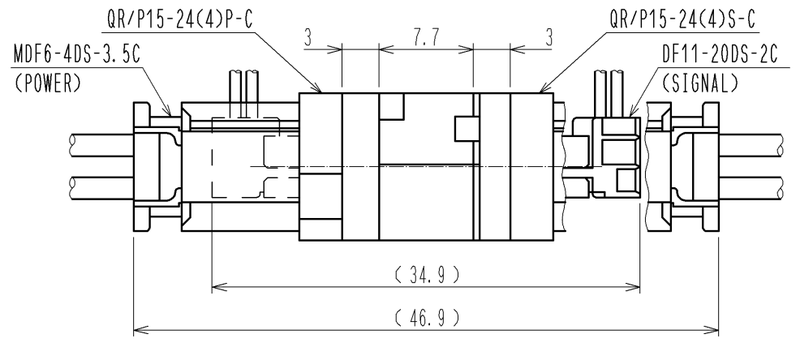

NOTES. 1 DF11-20DS-2C (CL543-0509-7) ASSEMBLED WITH DF11(※TABLE-1., GOLD PLATED CONTACT) CAN BE MATED AT THIS PORTION.
2 MDF6-4DS-3.5C (CL547-0074-1) ASSEMBLED WITH MDF6(※TABLE-2., TIN PLATED CONTACT) CAN BE MATED AT THIS PORTION.

※TABLE-1.

PART No.	CODE No.
DF11-22SCA	CL543-0604-8
DF11-2428SCA	CL543-0551-3
DF11-30SCA	CL543-0608-9

※TABLE-2.

PART No.	CODE No.
MDF6-1618SC	CL547-0071-3
MDF6-2022SC	CL547-0073-9

3 REFER TO ATAD-E2828 FOR CONNECTOR LINE ARRANGEMENT WHEN MATED.
4 EFFECTIVE SCREW AREA SHALL BE 1.5 mm MIN.

NO.	MATERIAL	FINISH , REMARKS	NO.	MATERIAL	FINISH , REMARKS
2	PHOSPHOR BRONZE	CONTACT: GOLD PLATING 0.2μm MIN LEAD :TIN-COPPER PLATING 3μm MIN UNDER : NICKEL PLATING 0.8μm MIN	6	STEEL	OVER :NICKEL PLATING 0.8μm MIN UNDER:COPPER PLATING 2μm MIN
1	PHOSPHOR BRONZE	CONTACT: GOLD PLATING 0.2μm MIN LEAD : GOLD PLATING 0.2μm MIN UNDER : NICKEL PLATING 0.8μm MIN	5	POLYAMIDE	BEIGE, UL94V-0
			4	POLYAMIDE	BLACK, UL94V-0
			3	POLYBUTYLENE TEREPHTHALATE	BLACK, UL94V-0

UNITS	SCALE	COUNT	DESCRIPTION OF REVISIONS	DESIGNED	CHECKED	DATE
mm	2:1					

HIROSE ELECTRIC CO., LTD.

APPROVED	:NM. NISHIMATSU	14.11.05	DRAWING NO.	EDC3-120409-01
CHECKED	:NM. NISHIMATSU	14.11.05	PART NO.	QR/P15-24(4)P-C(50)
DESIGNED	:MT. ITANO	14.11.05	CODE NO.	CL221-0249-6-50
DRAWN	:MT. ITANO	14.11.05		1/1

HRS DRAWING FOR REFERENCE